Brio®

Brio® where ideas unfold

Brio® Weatherfold 4S

Exterior folding hardware for panels up to 150kg

Brio® where ideas unfold

Watch your adventurous architectural ideas unfold into exciting reality with the Brio range of sliding and folding door hardware.

Brio is passionate about shaping the spaces in which people live, work and play. With subsidiaries in the UK and USA – Brio is recognised by architects worldwide as a leading design and manufacturing company.

Brio's R&D department brings a strong design element to the business, developing and testing ground breaking concepts that continue to be at the forefront of the industry.

So it's no surprise our name Brio translates to Energy, Spirit and Vitality – the core values that drive us to always discover new solutions for our customers.

We are committed to the continuous improvement of quality. That is why Brio, located in Sydney, is certified to Quality Management System AS/NZ ISO 9001:2008.

Brio, part of the Allegion family of brands

Stunning indoor/outdoor spaces

Whether it's entertaining family and friends or hosting your most valued customers, Brio brings a stylish edge when it comes to using space more efficiently.

Exterior folding doors are without a doubt the new vogue in indoor/outdoor living today. Whether you need to connect or partition an outdoor area; exterior folding doors open and close effortlessly, and stack unobtrusively to create wide open vistas.

Brio's Weatherfold series has long been recognised as the architectural standard in exterior folding door hardware. Designed in Australia, Brio Weatherfold is trusted by major window and door manufacturers.

We work closely with these manufacturers to develop innovative solutions that work harmoniously with their products in residential and commercial applications.

After generations of Weatherfold across the decades, we have now taken it to the next level with the launch of the fourth generation:

Brio® Weatherfold 4S

Brio Weatherfold 4s

Exterior folding door hardware system for panels up to 150kg

Designed to handle panels up to 150kg with precision and ease, the Brio Weatherfold 4s creates openings up to 4m high and 19.6m wide.

Up to 8 equal size panels can fold seamlessly in each direction with inward or outward opening functionality.

Suitable for aluminium and timber doors, there are now 3 panel weight capacities available:

- 50kg
- 100kg
- 150kg

It's a complete system that includes pivot sets, hanger sets, hinge sets, top track, bottom channel, seals, locking and flush bolt options.

Matching hardware is available in a choice of 4 premium finishes:

Polished Stainless | Satin Stainless | PVD Brass | PVD Black

New features

The latest in a long line of Brio innovation, Weatherfold 4s brings numerous new exciting features, making it the smartest choice for exterior folding door hardware.

New locking mechanism with no loose parts

The new push button locking mechanism (Patent Pending) is a stand-out element and is consistent across all hangers and pivots. It has no loose parts that can get misplaced during installation.

Easy adjustment

For faster installation, the locking mechanism provides easy vertical adjustment. Just simply depress the push button and lower or raise the panel using the hex key provided.

Failsafe design

Featuring automatic locking technology, the system self locks as soon as the push button is released, ensuring that the panel always remains set.

Concealed design

The locking mechanism is concealed within the track to offer greater visual appeal.

Security

The intermediate hanger hinge, bottom guides and pivot now feature non-removal pin technology for enhanced security. No exterior hardware can be tampered with or removed.

New Locking Mechanism

As shown on the Brio Weatherfold 4s 100 Intermediate Hanger

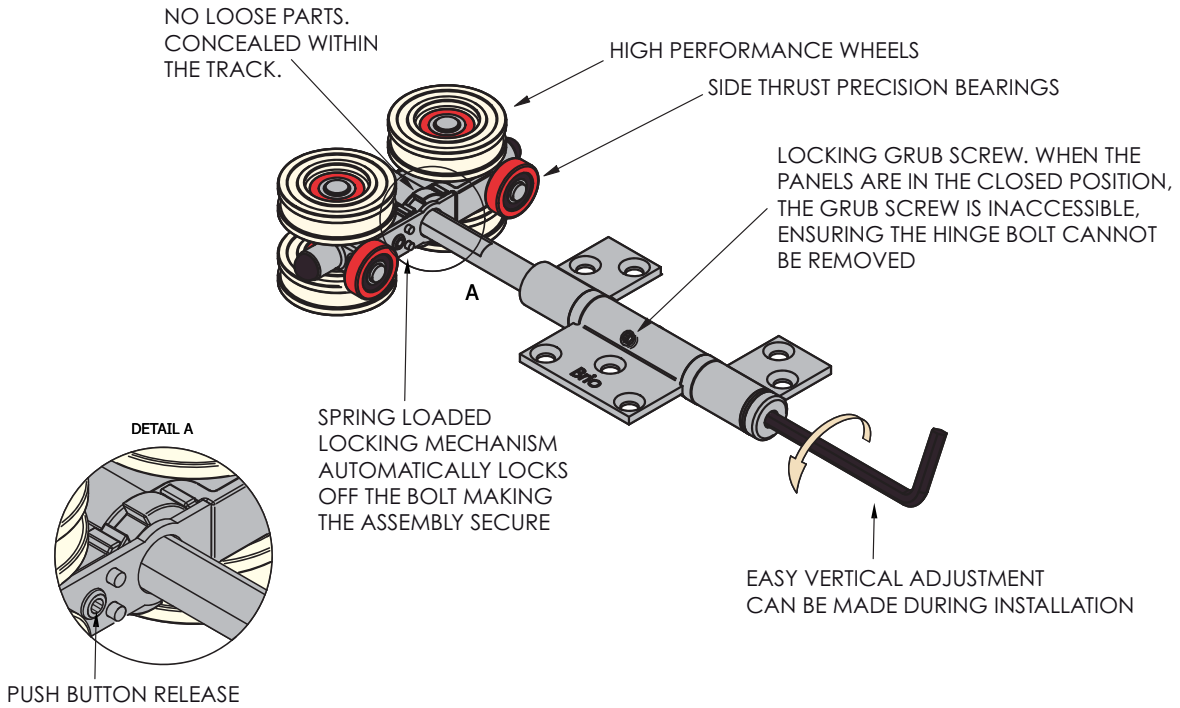

New features continued

Wider range

Sustainability trends and legislation are changing the way that we design buildings. There has been increased use of double glazing as a means of maximising thermal and acoustic insulation. Impact resistant glass is also being specified as a safety feature. All of this results in heavier panels. Weatherfold 4s has taken this into account with new high performance wheels and bearings and side thrust capabilities. As a result of this new design, Weatherfold 4s is available in 3 panel weight capacities through to 150kg.

Increased panel sizes

The maximum panel width has been increased to 1m on Weatherfold 4s 50, and 100 and 1.2m on Weatherfold 4s 150. Maximum panel height is 3m on Weatherfold 4s 50, 3.3m on Weatherfold 4s 100; and 4m on Weatherfold 4s 150.

Ambidextrous End Guides

New ambidextrous End Guides put an end to specifying left or right handed components. The End Guides can be changed from left to right handed orientation via a simple adjustment on site. A handy new feature that prevents installers being stranded with the wrong hardware.

Improved aesthetics

All visible hardware is matching in a choice of four premium finishes; Polished Stainless Steel, Satin Stainless Steel, PVD Brass and PVD Black. PVD (Physical Vapor Deposition) provides an attractive finish and hard wearing surface that is highly corrosion resistant.

Brio Weatherfold 4s ambidextrous End Guide

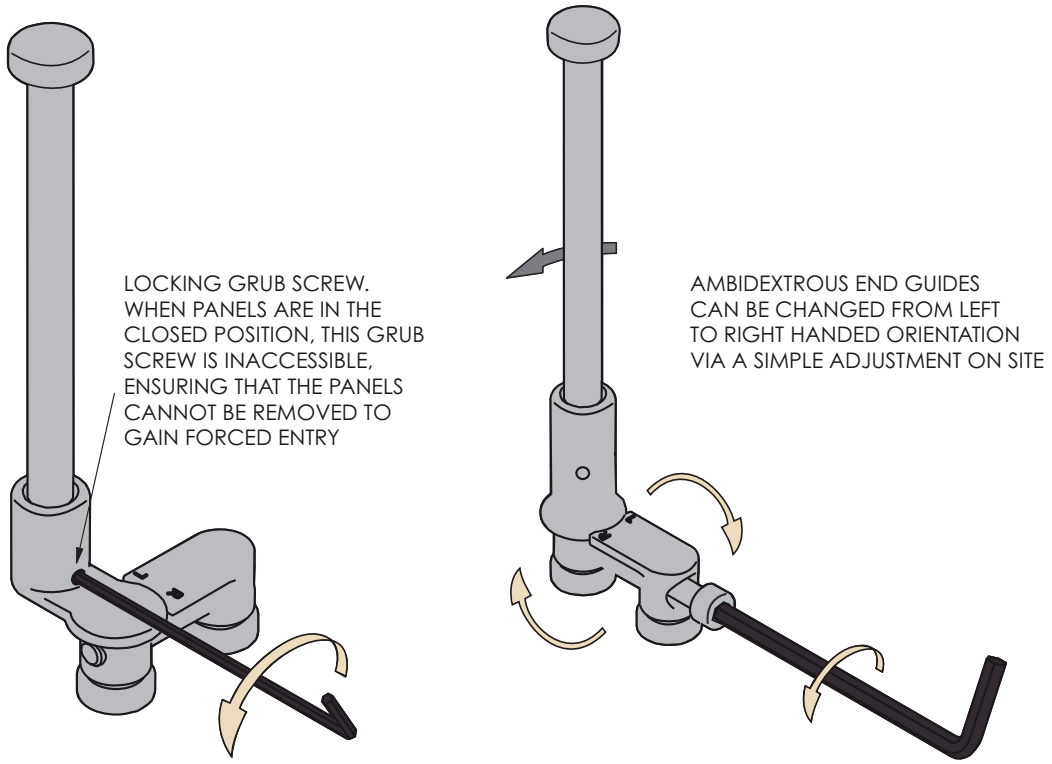

Hinge options

More hinge options to suit a wide spectrum of applications have been added to the range.

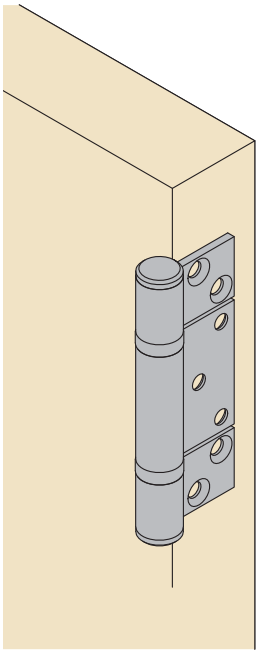

Non Mortice Hinge for Weatherfold 4s 50 & 100

- Surface mounted.
- Highly versatile. Suitable for timber panels and aluminium panels.
- Accommodates panels 35-68mm thick. Shown above on a 40mm thick panel.
- Ideal for Weatherfold 4s 50 timber and aluminium systems.
- Hinge size: 100mm high x 66mm wide x 3mm thick.

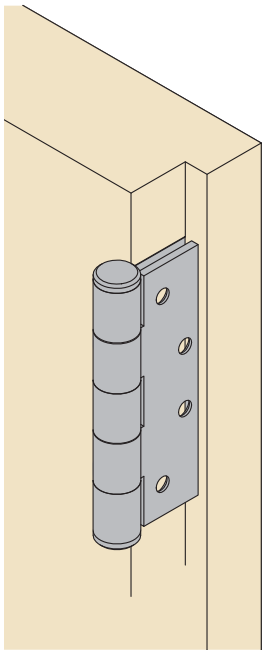

Mortice Square Corner Hinge for Weatherfold 4s 50 & 100

- The Classic Look.
- Provides the traditional straight-edge look of timber joinery
- Accommodates panels 35-68mm thick. Shown above on a 40mm thick panel.
- Suitable for rebated panels down to 35mm thickness.
- Ideal for Weatherfold 4s 50 systems for timber.
- Hinge size: 100mm high x 66mm wide x 3mm thick.

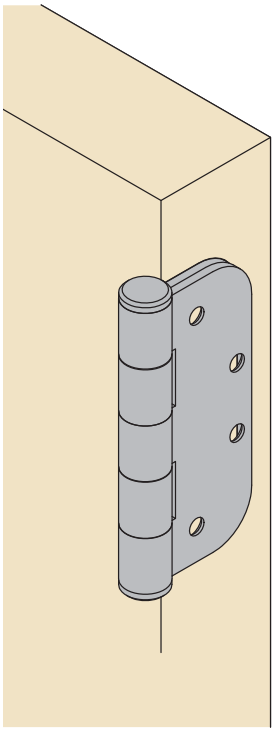

Mortice Radius Corner Hinge for Weatherfold 4s 50 & 100

- The Contemporary Look.
- Suitable for modern manufacturing processes and routers.
- Accommodates panels 44-68mm thick. Shown above on a 45mm thick panel.
- Ideal for Weatherfold 4s 100 systems for timber.
- Hinge size: 100mm high x 80mm wide x 3mm thick.

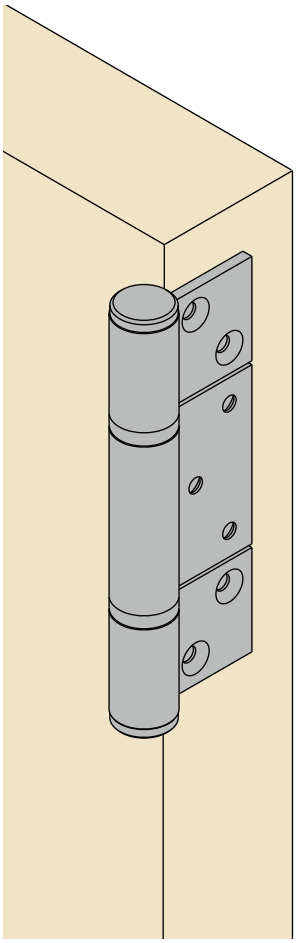

Non Mortice Hinge for Weatherfold 4s 150

- Surface mounted.
- Highly versatile. Suitable for timber panels and aluminium panels.
- Accommodates panels 44-68mm thick. Shown above on a 57mm thick panel.
- Used only on Weatherfold 4s 150.
- Hinge size: 152mm high x 92mm wide x 4mm thick.

Accessories

Screening

Brio Weatherfold 4s and the optional integrated Brio 612 Retractable Pleated Insect Screen have been designed to work perfectly in your home and workplace.

The Brio 612 Retractable Pleated Insect Screen is the largest of its kind on the market, offering innovative and functional ways to screen large openings while protecting your home from annoying insects.

A single screen can span 3.2m high x 4.5m wide, accommodating a 5 panel folding unit with each panel up to 900mm in width. While a double screen can span 3.2 m high x 9 m wide.

The Brio 612 Screen uses the latest European PVC coated polyester mesh with UV protection technology. Screens come in three powdercoat colours - Black, Precious Silver Pearl and Pearl White, with custom colours also available.

And a feature we know many Specifiers appreciate, The Brio 612 Screen can screen corner openings without the need for a corner post, providing stunning uninterrupted views, as shown above.

To ensure the highest level of quality is maintained for our customers, Brio 612 Screens are now assembled at our global head office in Sydney, Australia. Our manufacturing facility has made a significant investment into purpose built robotic equipment that provides exceptional quality control. So you can rely on the responsiveness of the Brio team for delivery of your screens.

Self Draining Sills

Brio provides an optional self draining sill tailored to suit the typical panel thickness in each market. Refer to the separate Brio Self Draining Sill brochure for more information.

882 Magnetic Catch

The 882 Magnetic Catch enables the access swing door to be attached to the adjacent panel. When used in conjunction with the 6200 Series Mortice Lock, it enables the access door to fold fully open. The 882 Magnetic Catch is made to match the sizes, radii and finishes of Brio Flush Bolts and Flush Pulls.

189 Jamb Pivot

The 189 Jamb Pivot is an adjustable centre hinge for Weatherfold 4s applications that require additional central support or where the door panels are greater than 2400mm high. Hinging to the jamb provides a robust installation by fixing the panel in three locations.

199SS Security Aligner

An alternative to the 189 Jamb Pivot is the 199SS Security Aligner. This discreet product pulls the pivot door onto the frame to seal as the door rotates shut. The 199SS Security Aligner is concealed and inaccessible when the doors are closed for additional tamperproof security.

Durability

Nothing carries the Brio Brand without undergoing a rigorous test program. A proven performer, Weatherfold 4s is no exception. All components of Weatherfold 4s have passed endurance tests, so you can rest assured that Weatherfold 4s is built to last.

Corrosion resistance

Weatherfold 4s has completed extensive corrosion resistance tests conducted in an industry standard salt spray chamber.

Weatherfold 4s uses the highest quality corrosion resistant materials. All components are constructed using 300 series stainless steel, with the cast items in 316 grade.

Brio is one of only a few global companies to passivate all visual stainless steel surfaces and electro-polish all cast stainless components. These processes greatly reduce and eliminate surface discolouration often referred to as 'tea-staining'.

The Weatherfold 4s premium finishes of Satin Stainless, Polished Stainless, PVD Brass or PVD Black provide another level of protection from the elements and further enhance the system's durability.

Backed by our 10 Year Warranty

Brio Weatherfold 4s uses only the highest quality materials and is the culmination of countless hours of research and development and rigorous product testing. Therefore Brio is pleased to offer a 10 year warranty on all Weatherfold 4s Hardware. Refer to our web site for details.

10 years

Weatherfold 4s 100

Hardware Layout – Non Mortice Hinges

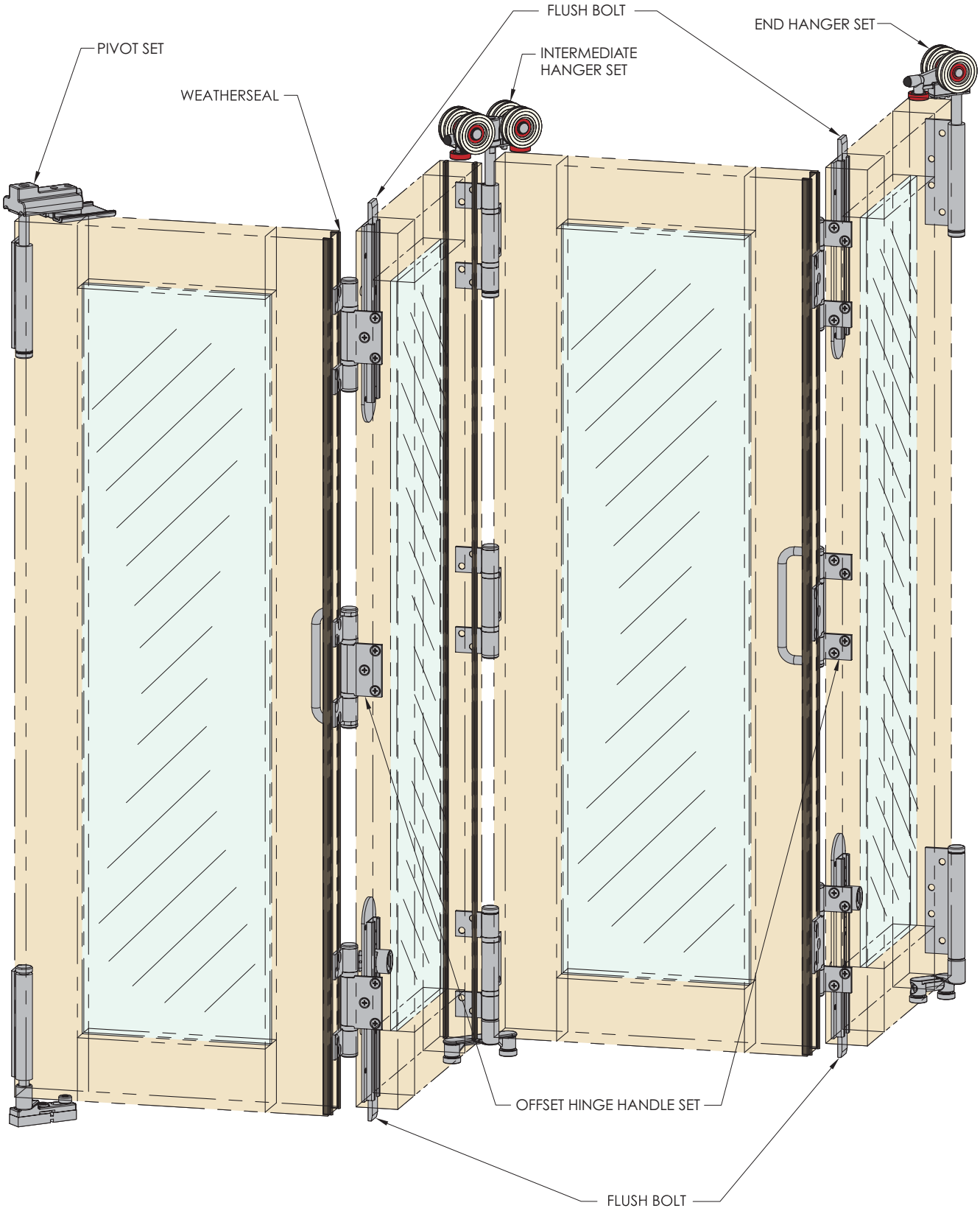

Weatherfold 4s 100

Top and Front Views – Non Mortice Hinges

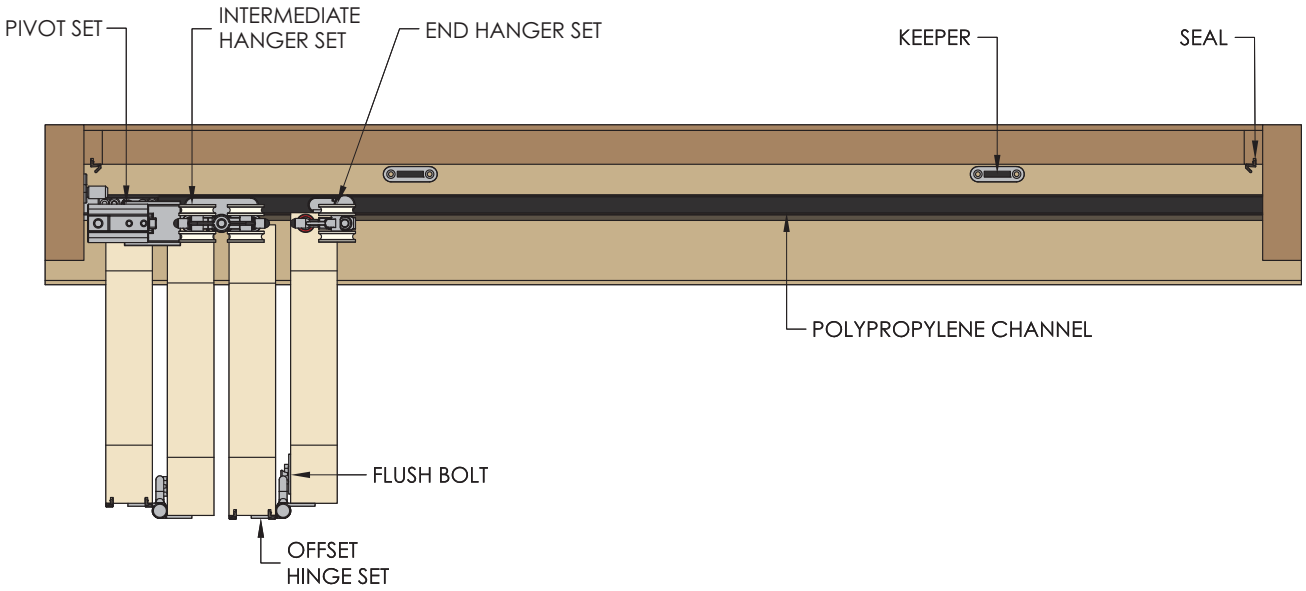

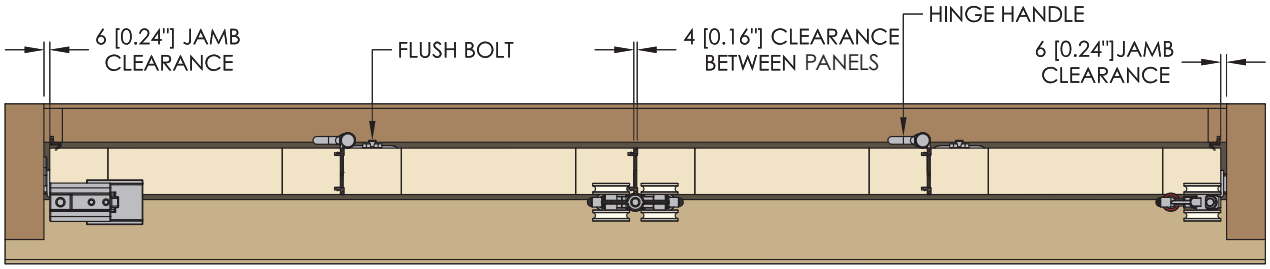

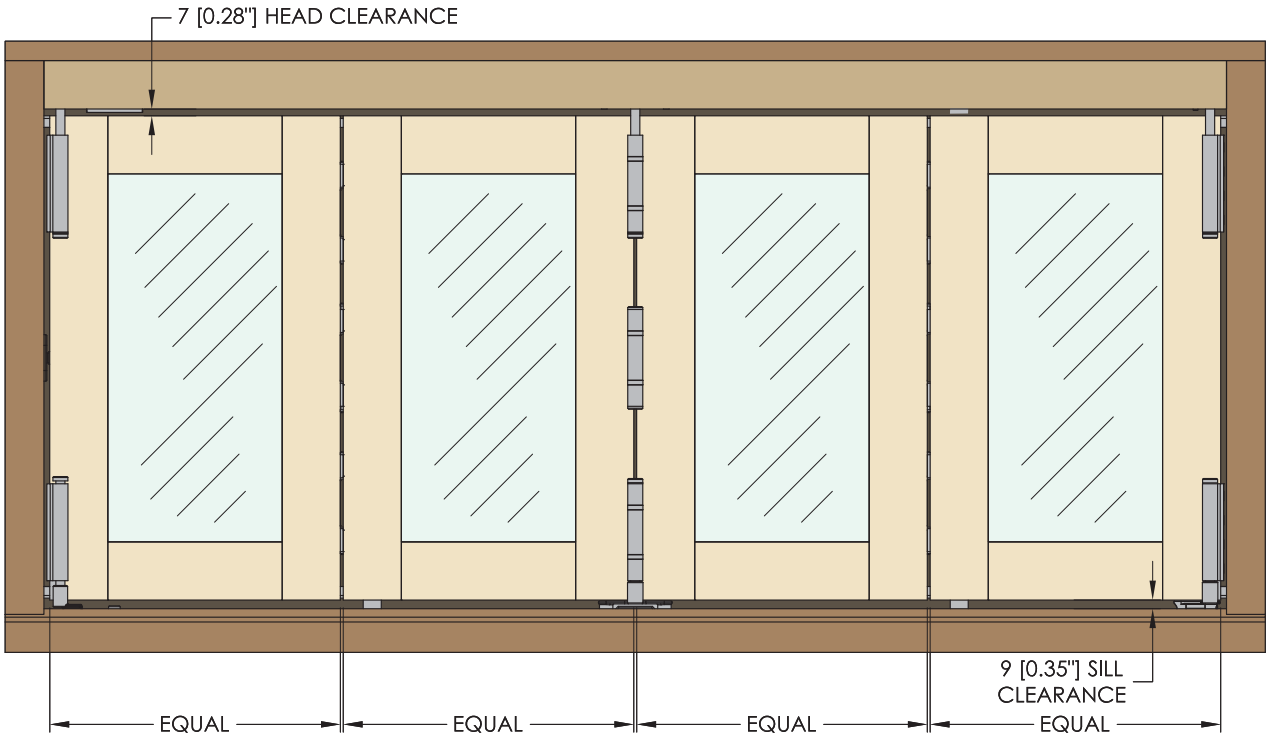

Weatherfold 4s 50 and 100

End View – Non Mortice Hinges

BRIO WEATHERFOLD 4s 50

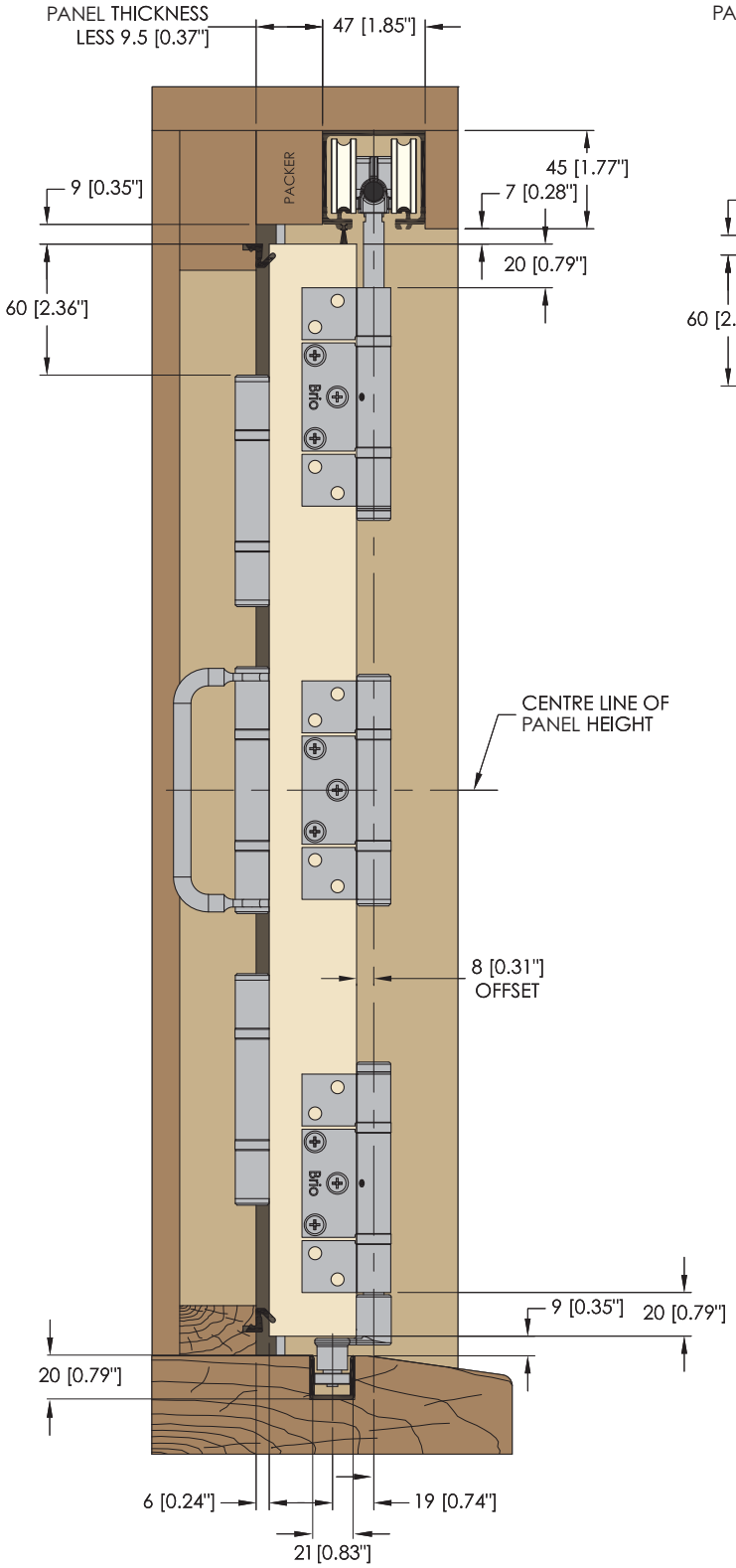

BRIO WEATHERFOLD 4s 100

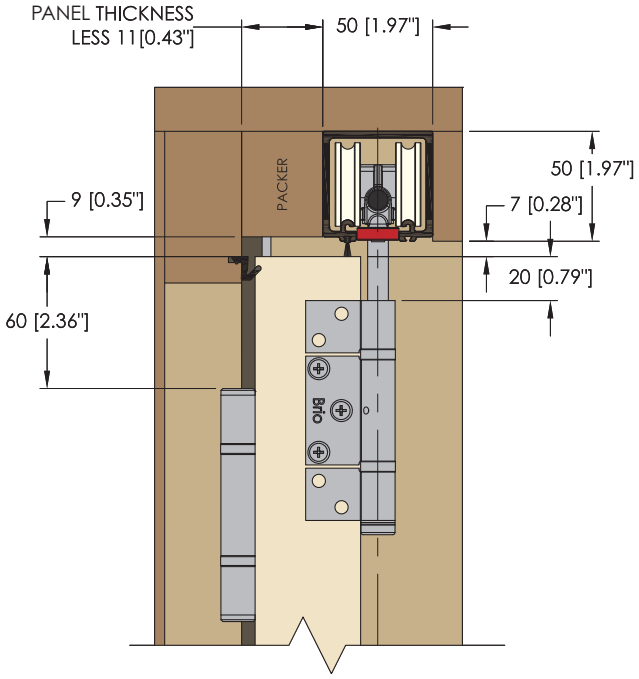

Weatherfold 4s 100

Hardware Layout – Non Mortice Hinges Aluminium Panels

Weatherfold 4s 100

Top and Front View – Non Mortice Hinges Aluminium Panels

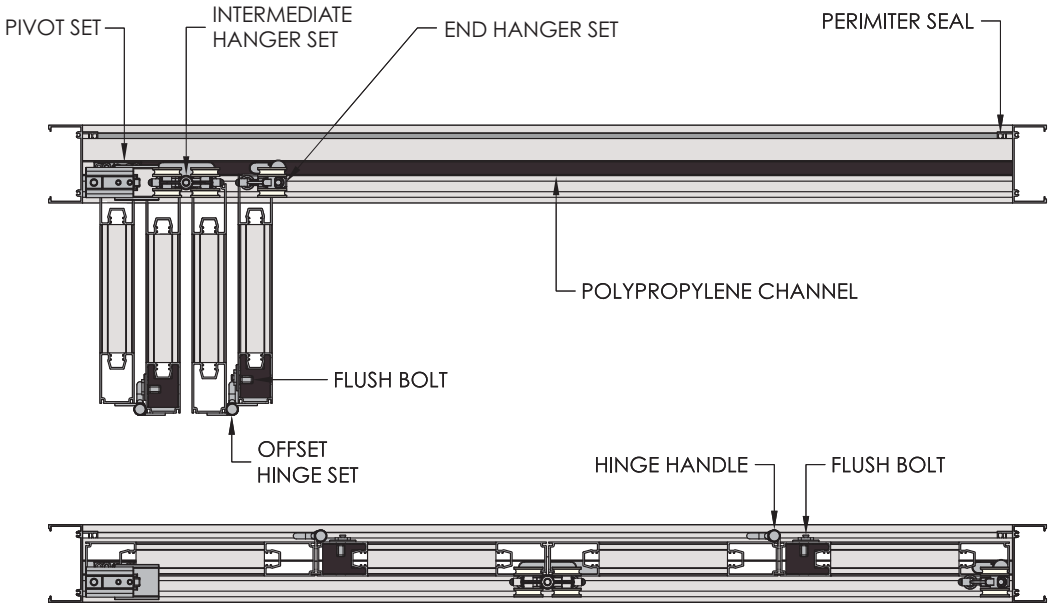

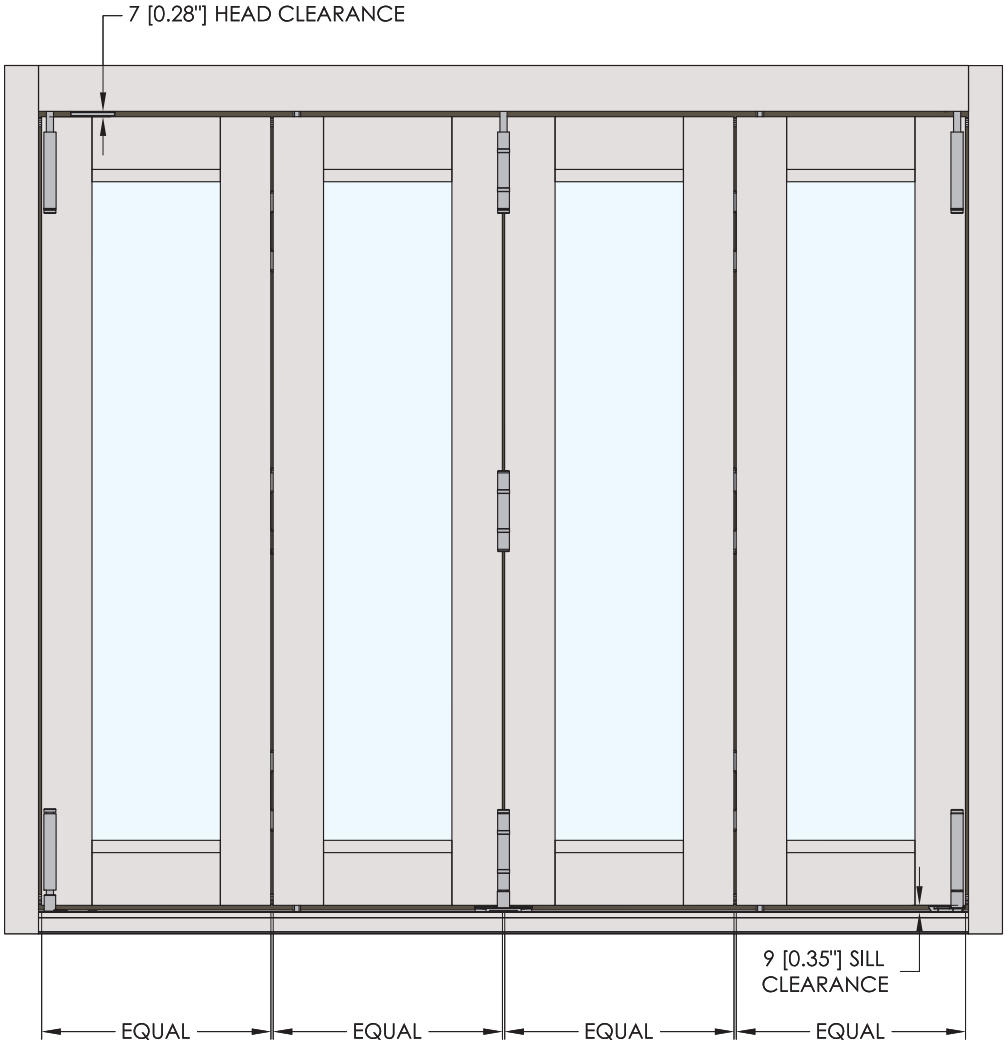

Weatherfold 4s 50 and 100

End View – Non Mortice Hinges Aluminium Panels

BRIO WEATHERFOLD 4s 50

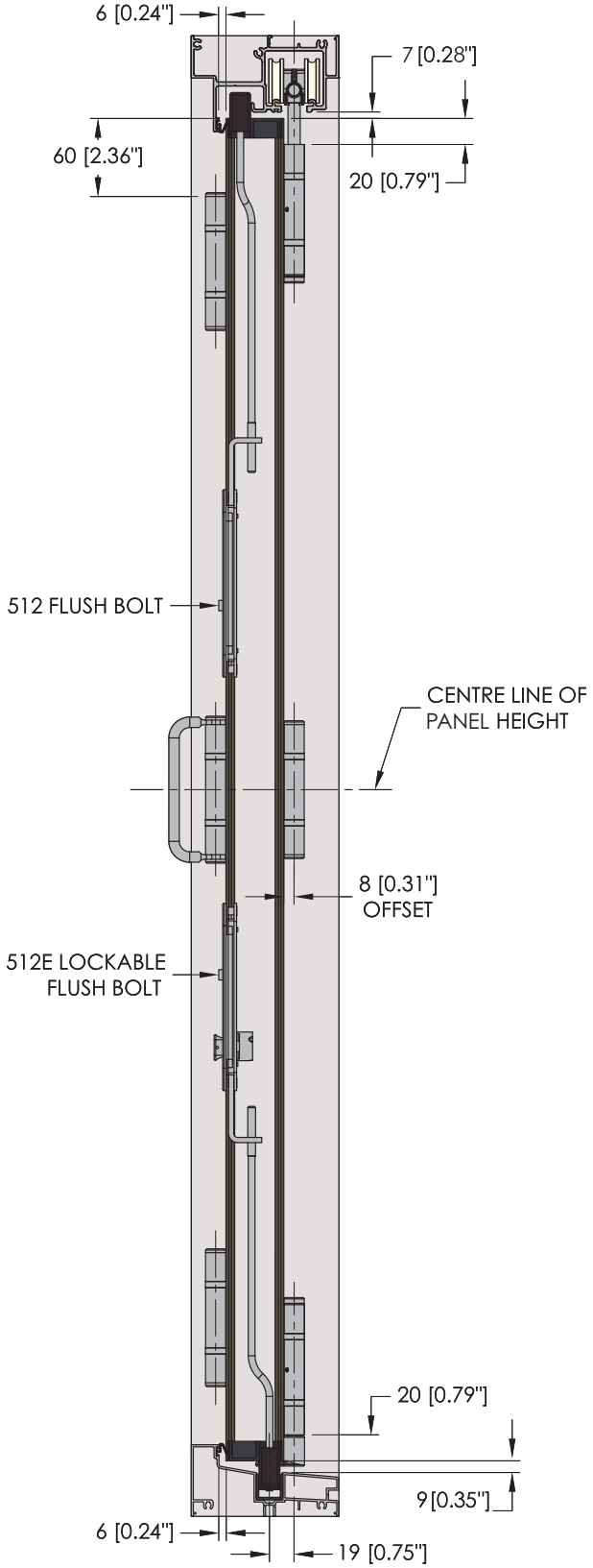

BRIO WEATHERFOLD 4s 100

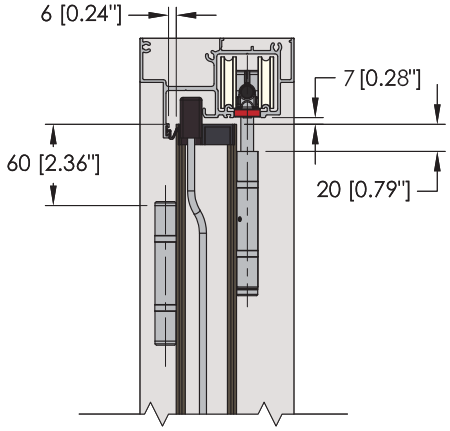

Weatherfold 4s 100

Hardware Layout – Mortice Radius Corner Hinges

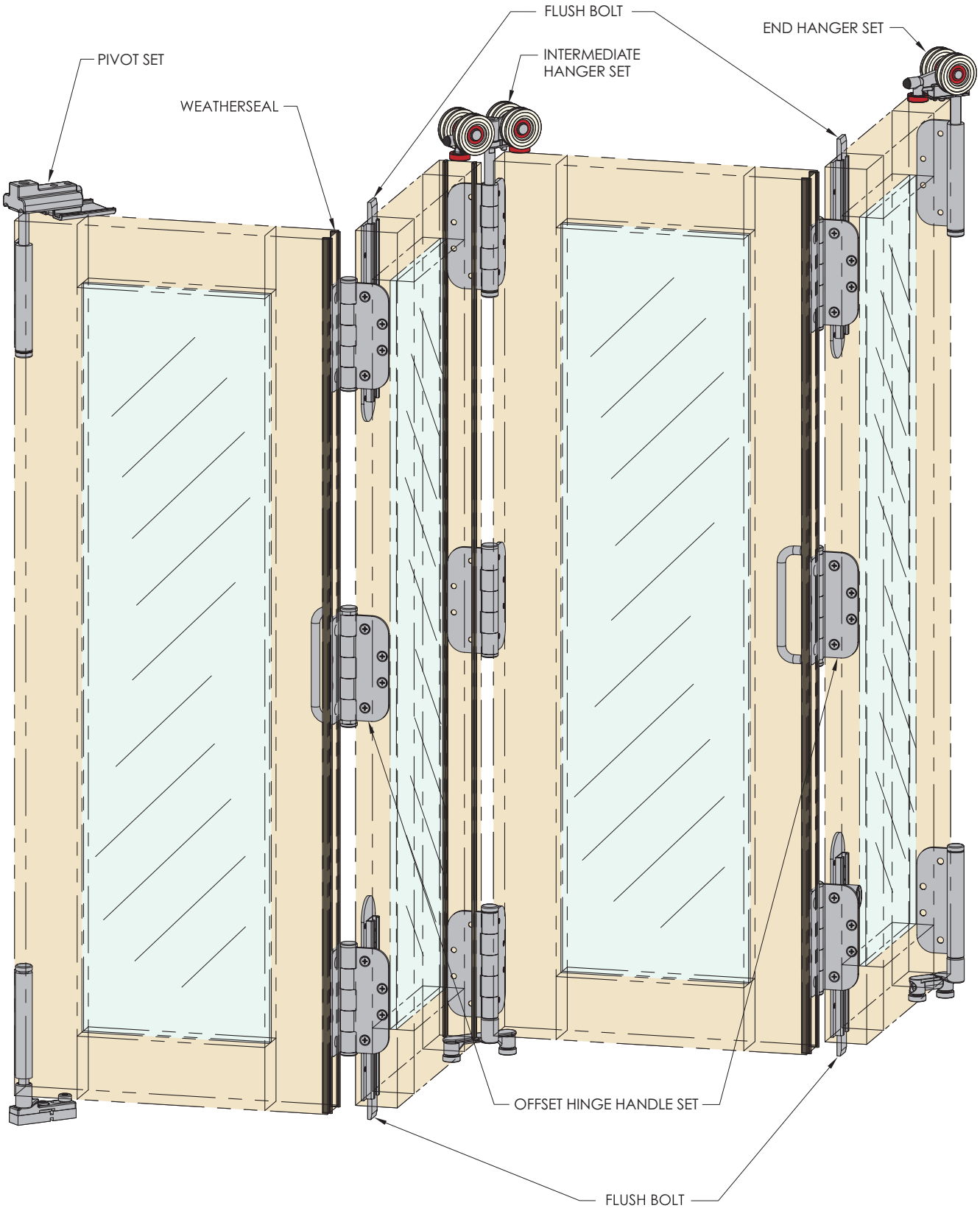

Weatherfold 4s 100

Top and Front View – Mortice Radius Corner Hinges

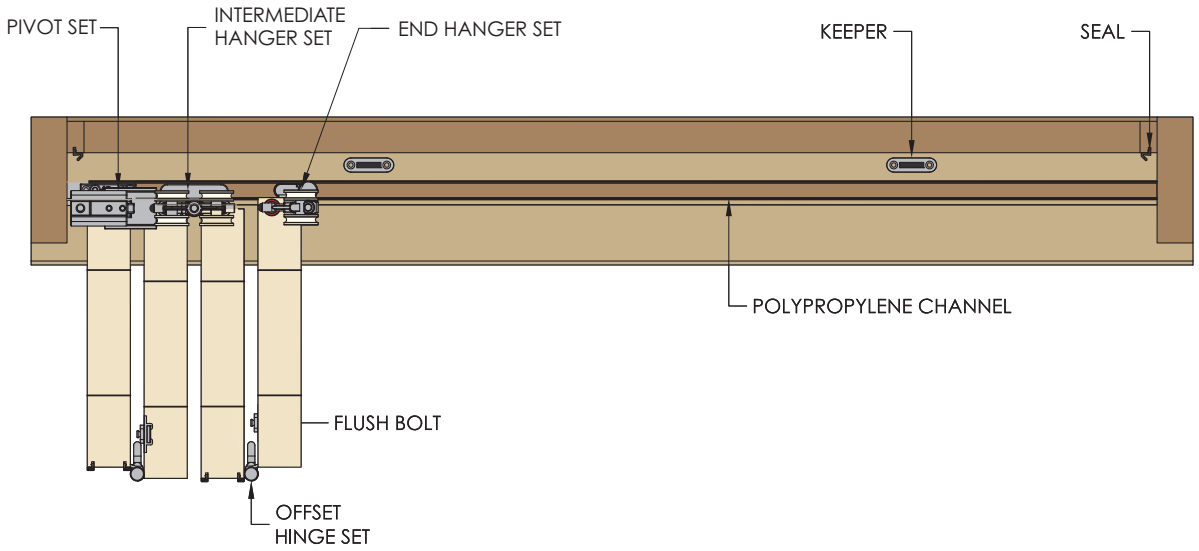

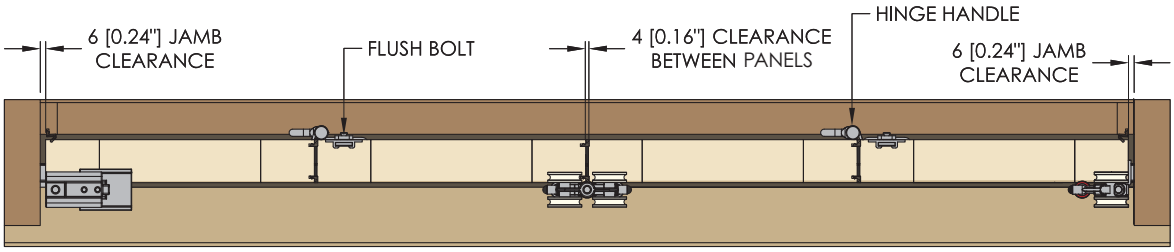

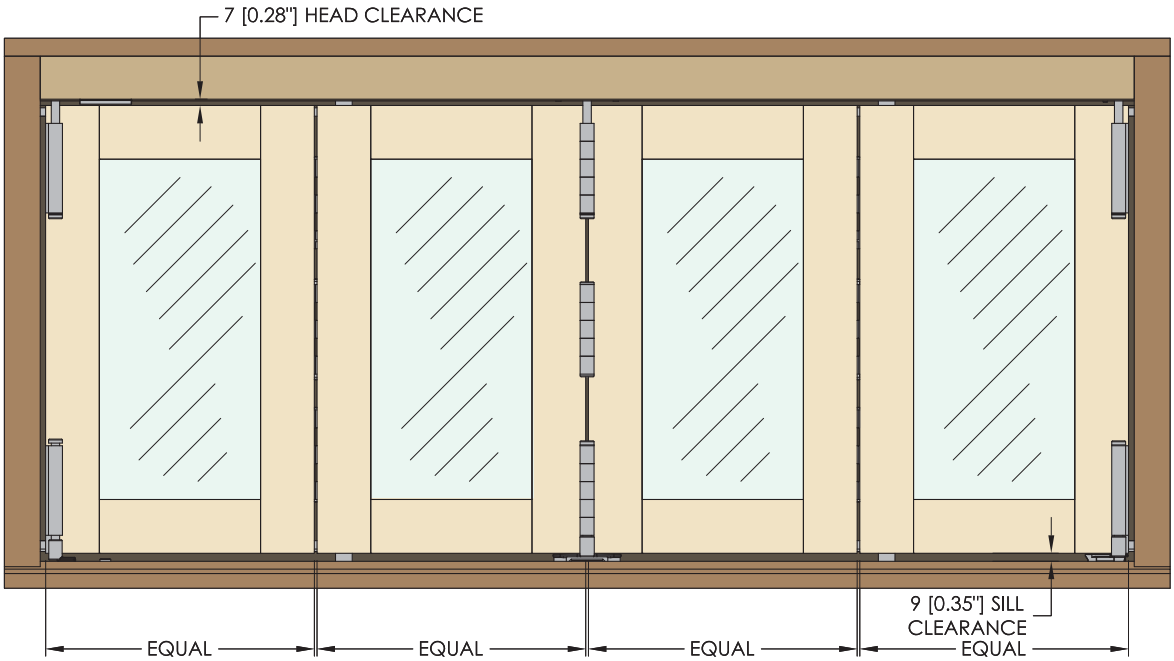

Weatherfold 4s 50 and 100

End View – Mortice Radius Corner Hinges

BRIO WEATHERFOLD 4s 50

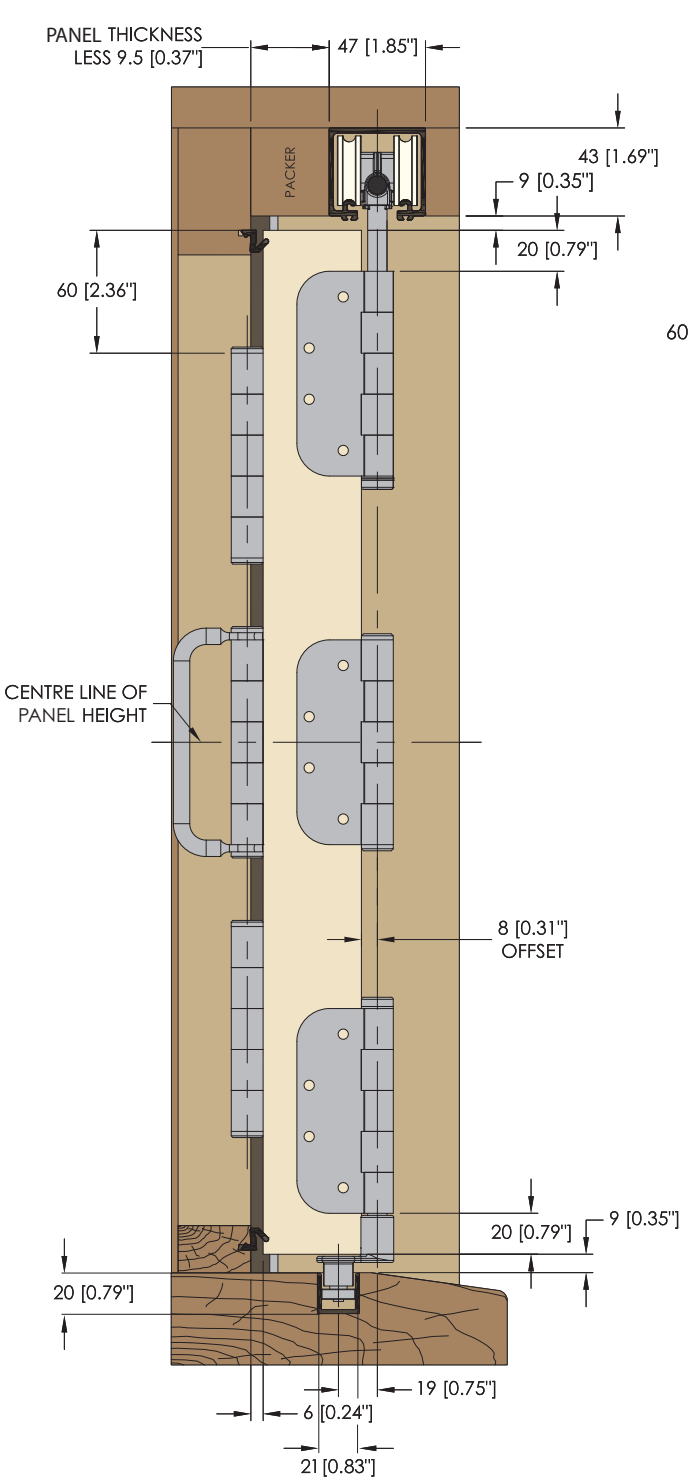

BRIO WEATHERFOLD 4s 100

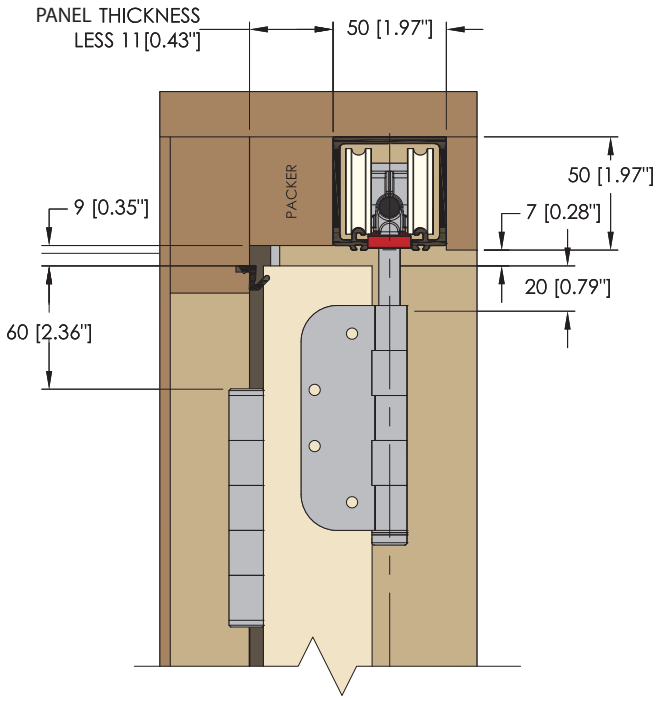

Weatherfold 4s 100

Hardware Layout – Mortice Square Corner Hinges

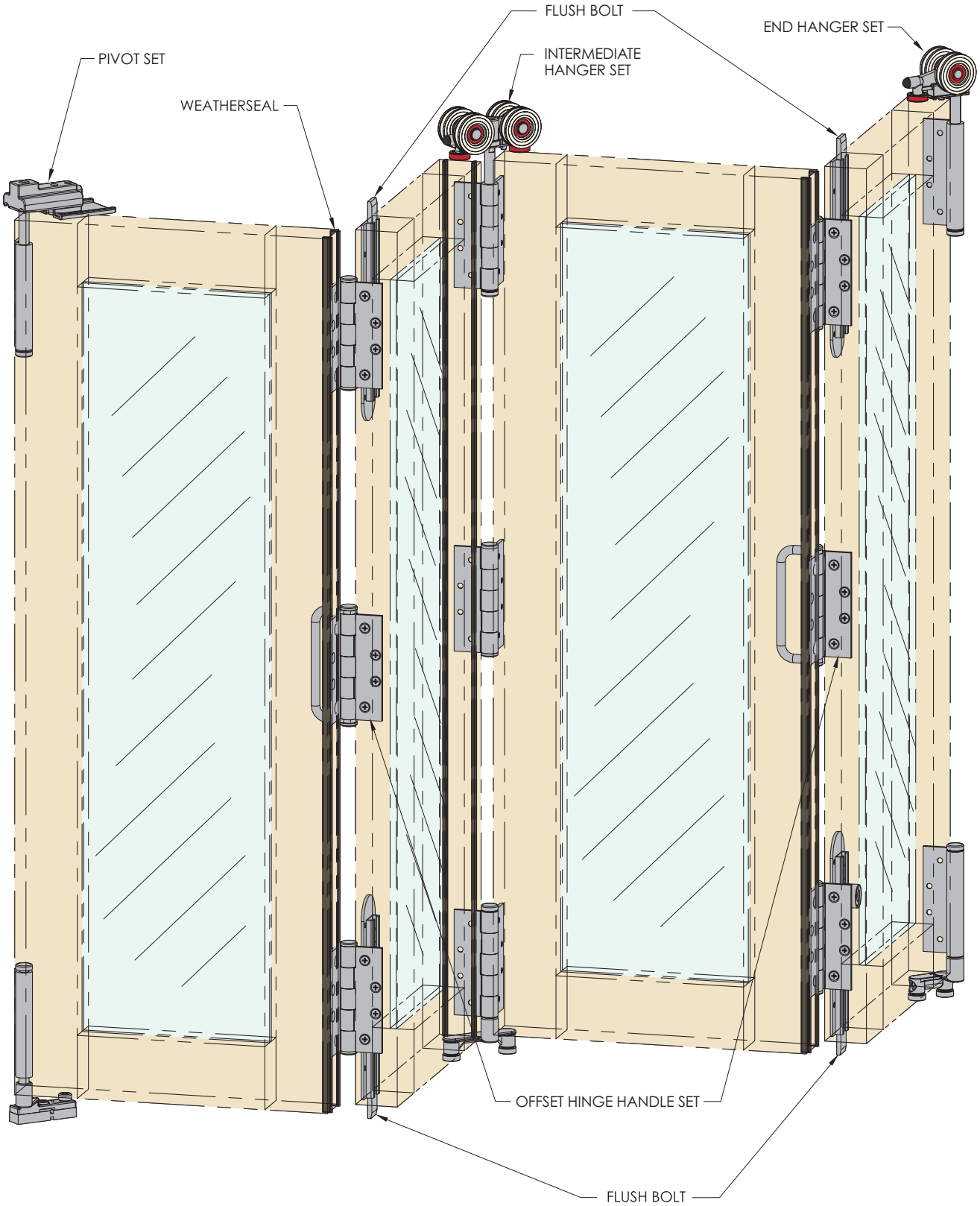

Weatherfold 4s 100

Top and Front View – Mortice Square Corner Hinges

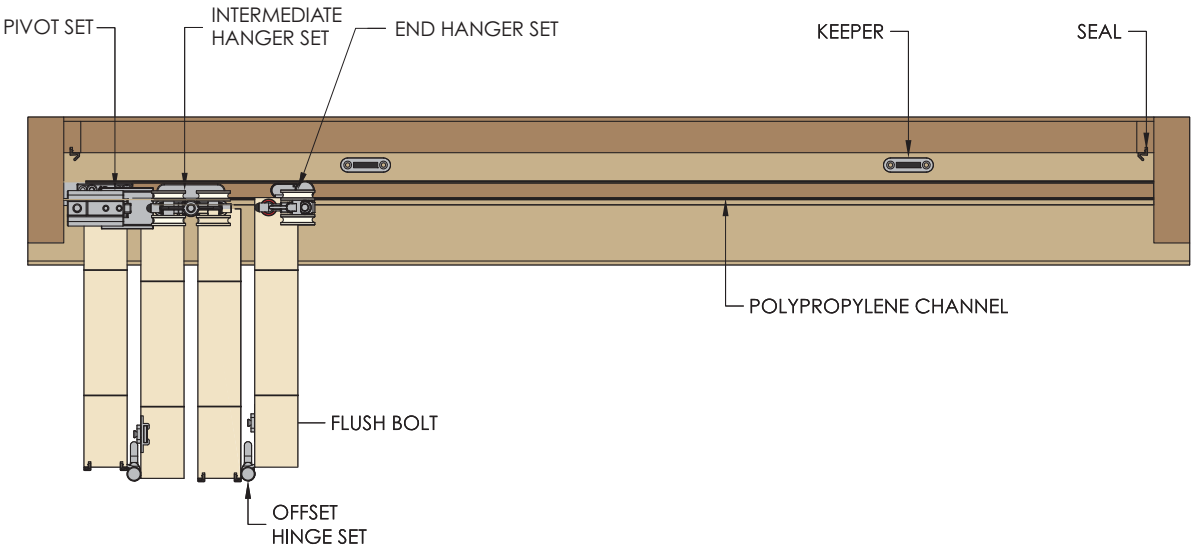

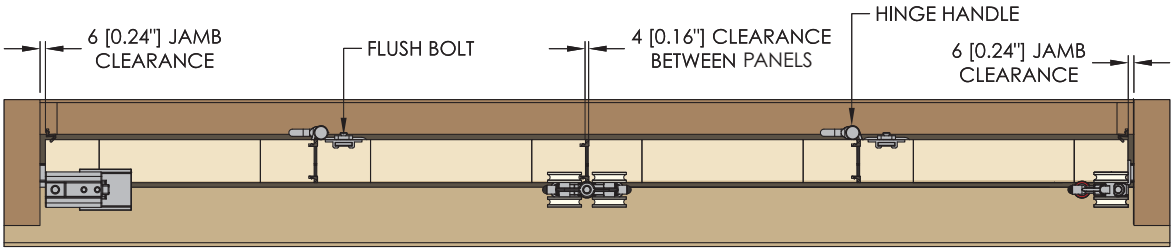

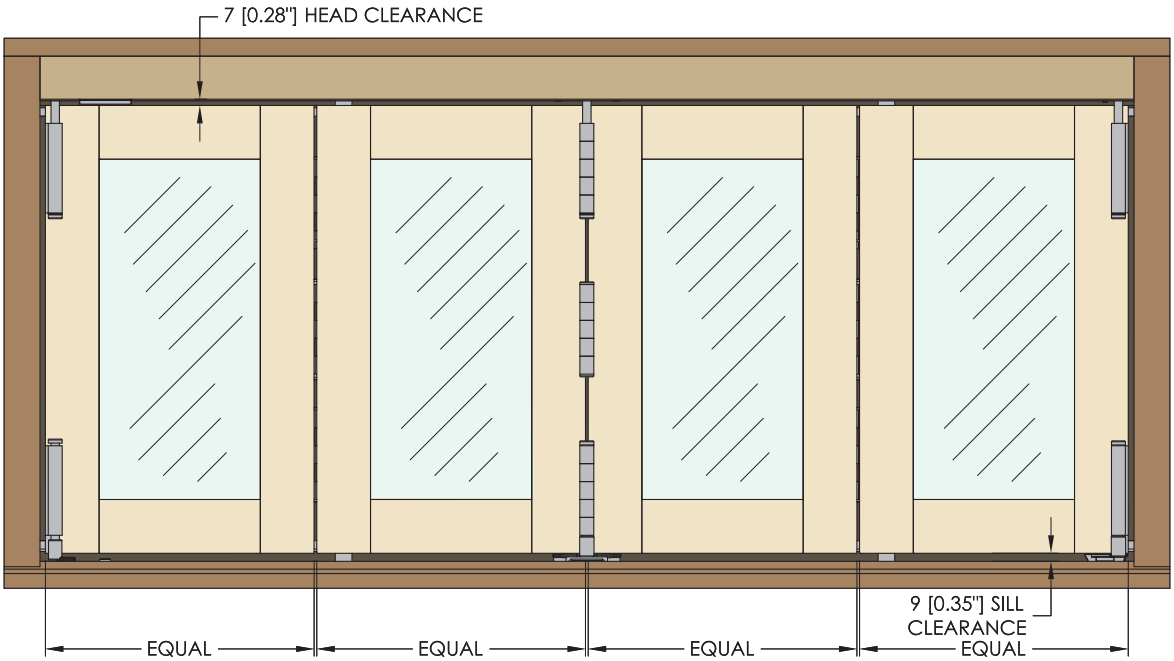

Weatherfold 4s 50 and 100

End View – Mortice Square Corner Hinges

BRIO WEATHERFOLD 4s 50

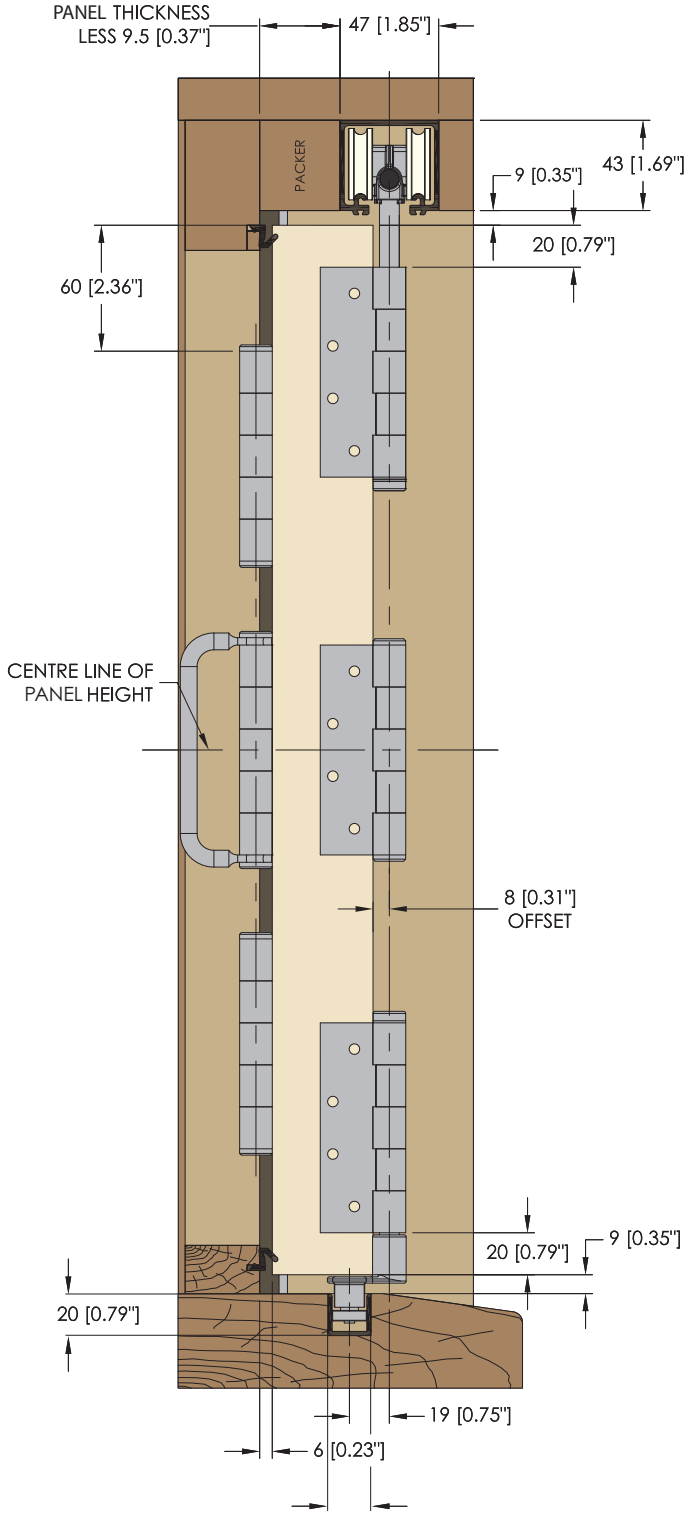

BRIO WEATHERFOLD 4s 100

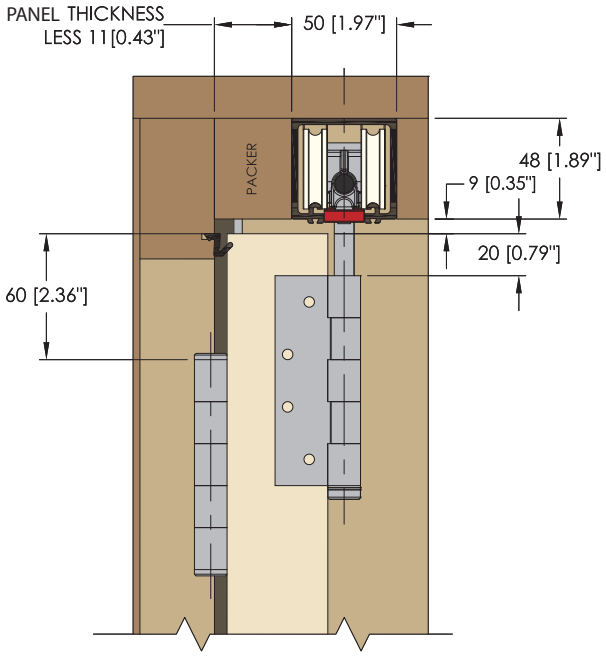

Weatherfold 4s 150

Hardware Layout – Non Mortice Hinges

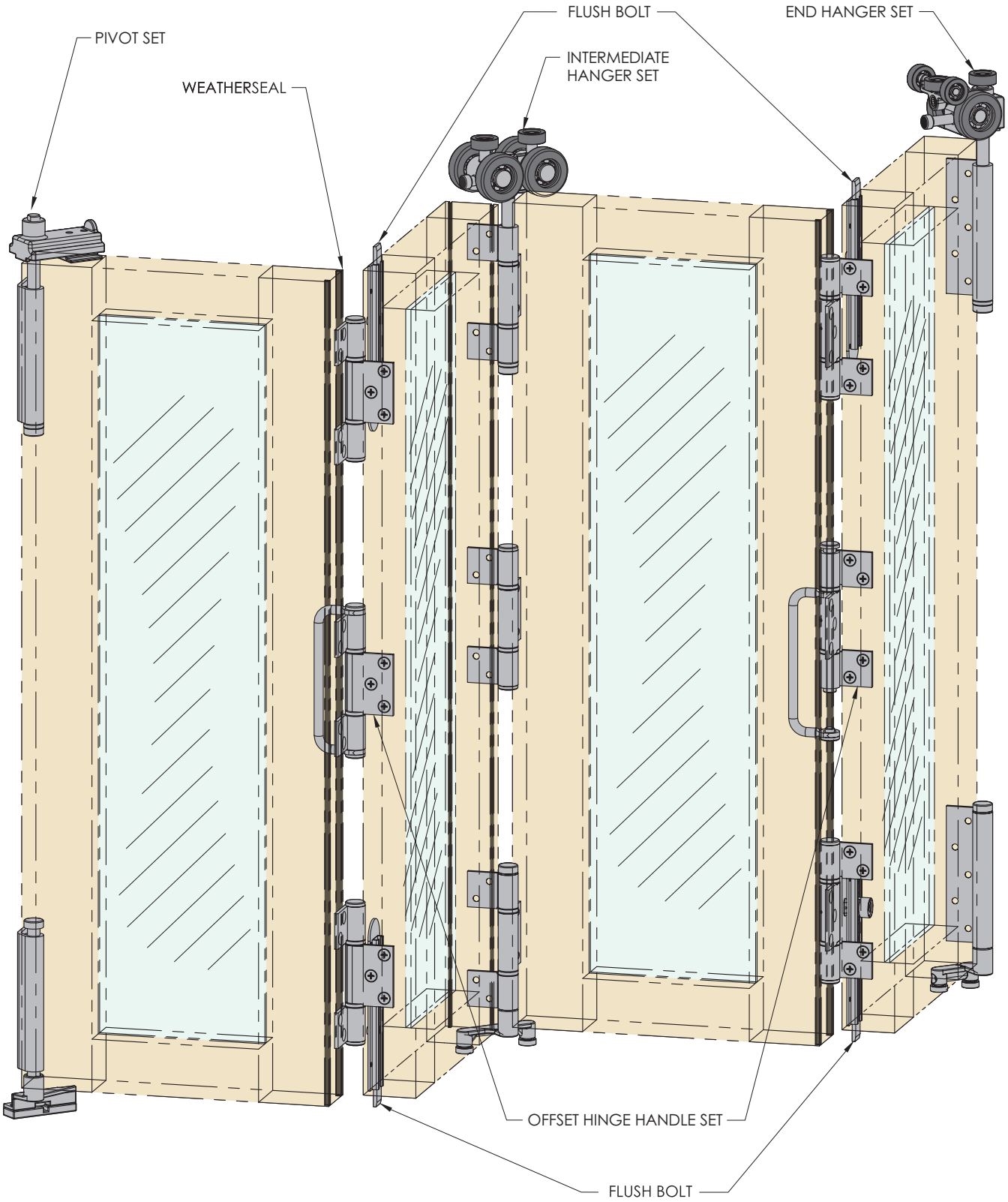

Weatherfold 4s 150

Top and Front View – Non Mortice Hinges

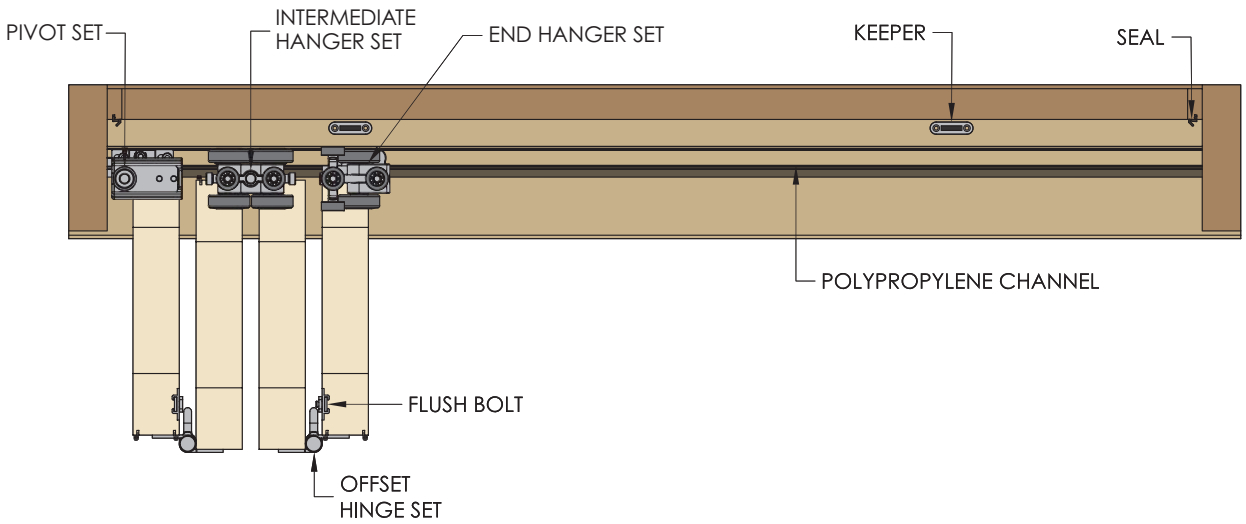

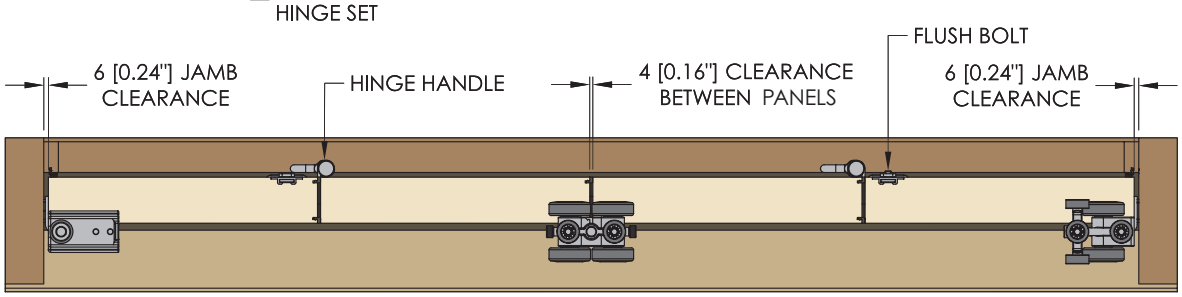

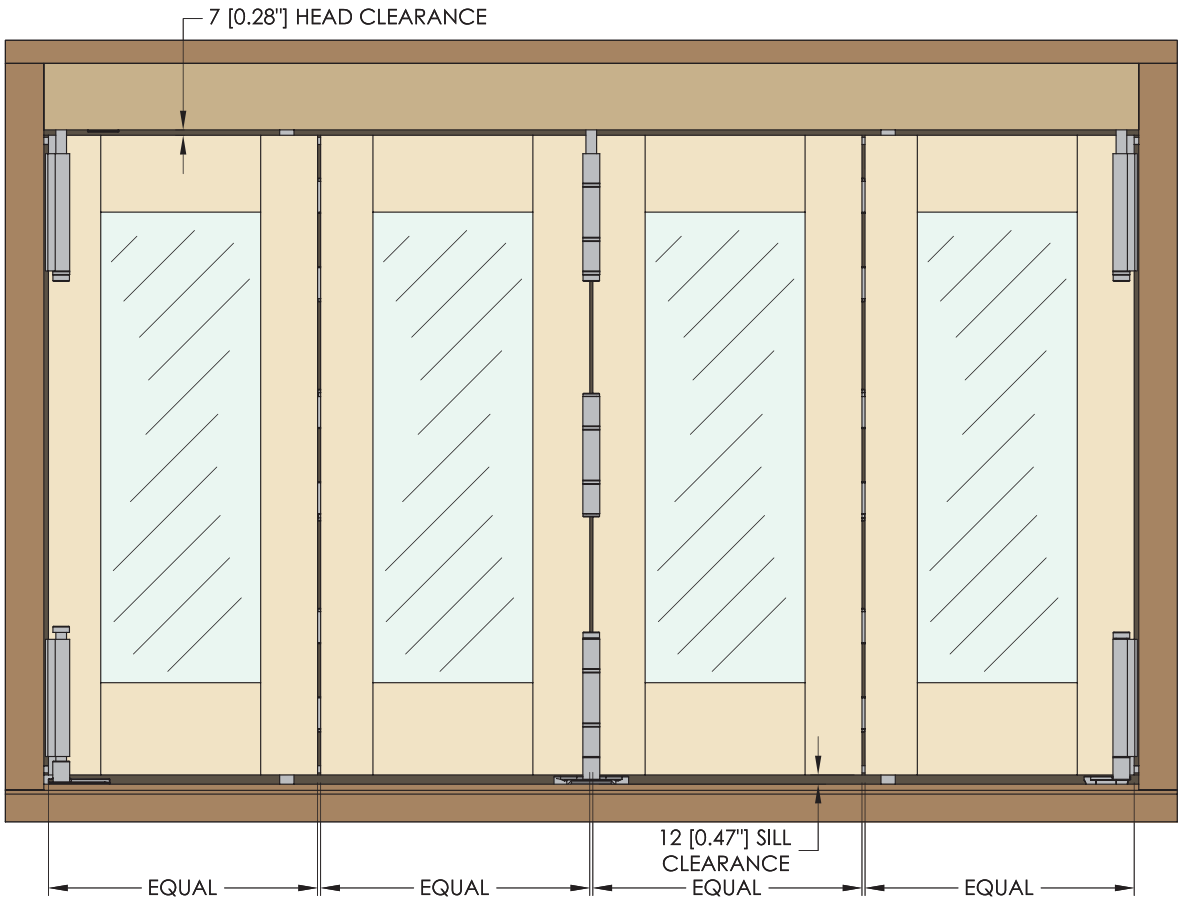

Weatherfold 4s 150

End View – Non Mortice Hinges

BRIO WEATHERFOLD 4s 150

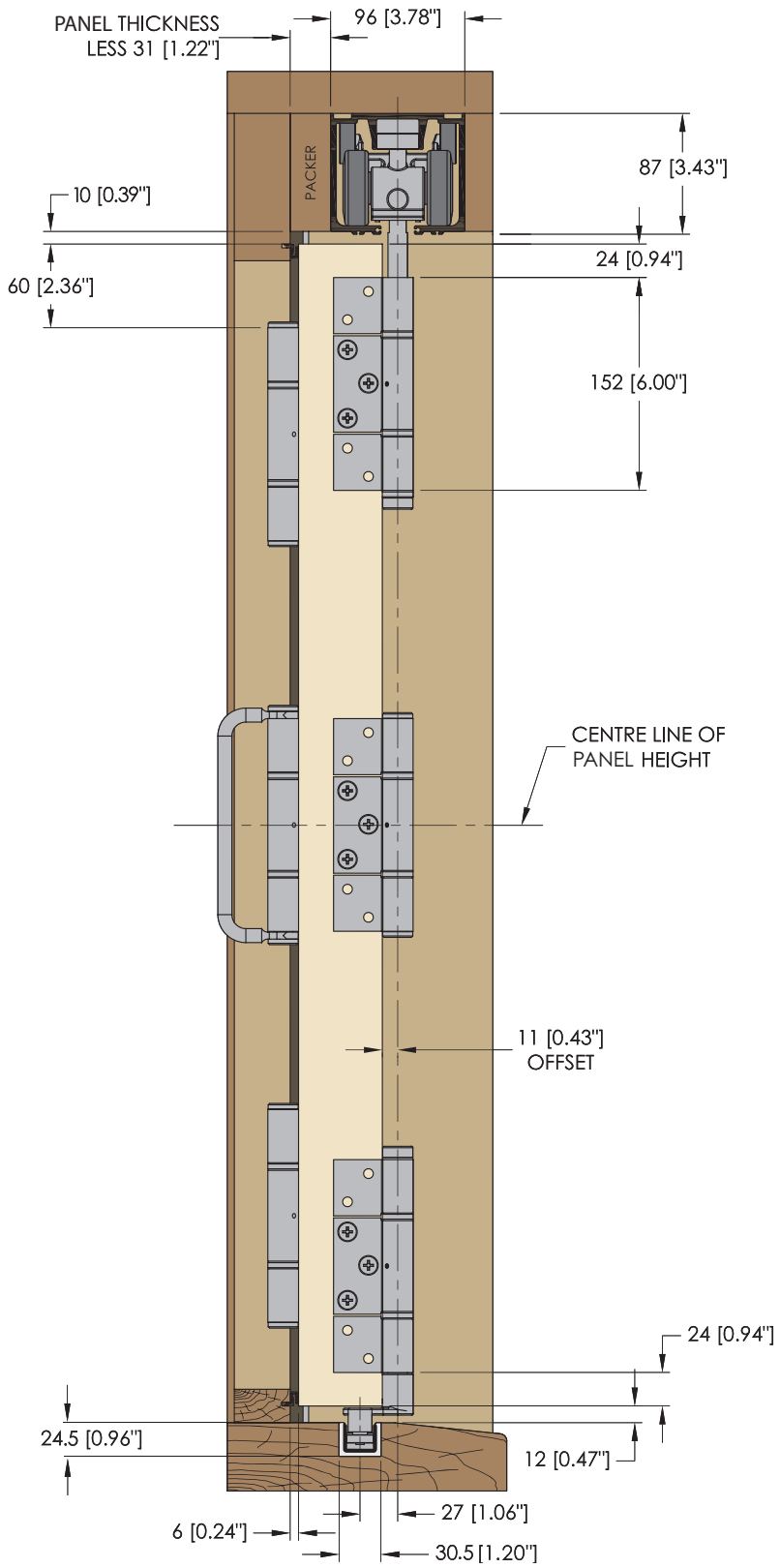

612 Integrated Retractable Pleated Insect Screen

Top View – Brio Weatherfold 4s 50 &100

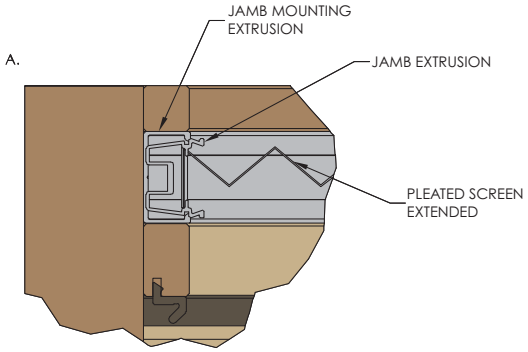

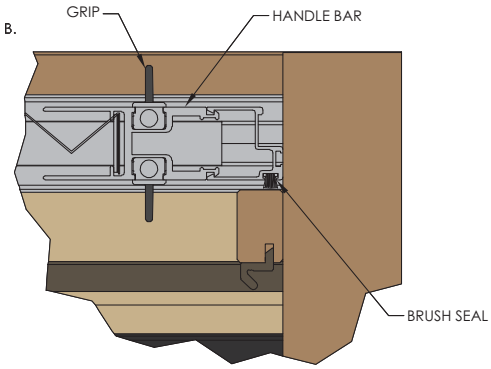

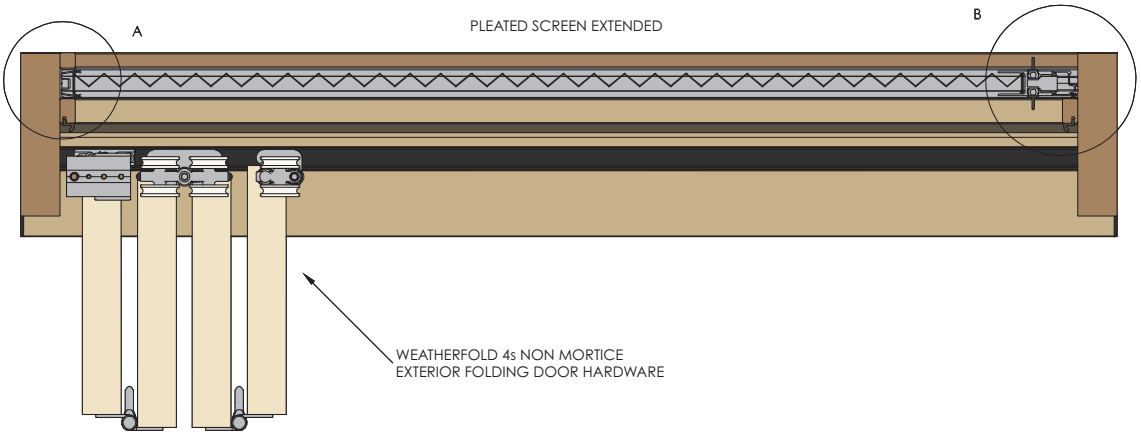

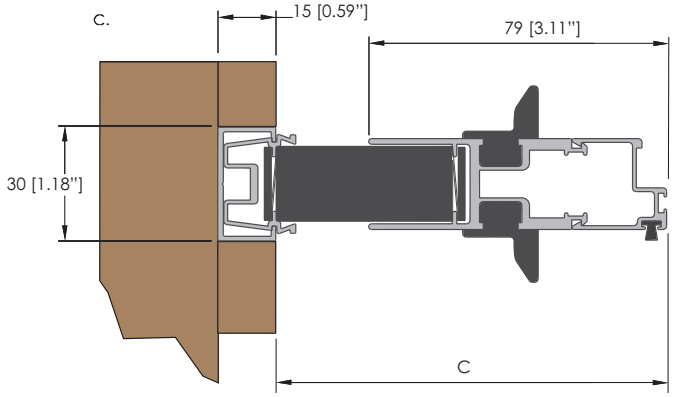

SCREEN WIDTH MM	DIMENSION C (OVERALL)
1100 [3'7"]	85 [3.35"]
1500 [4'11"]	85 [3.35"]
2000 [6'7"]	95 [3.74"]
2700 [8'10"]	107 [4.21"]
3600 [11'10"]	132 [5.20"]
4500 [14'9"]	155 [6.10"]

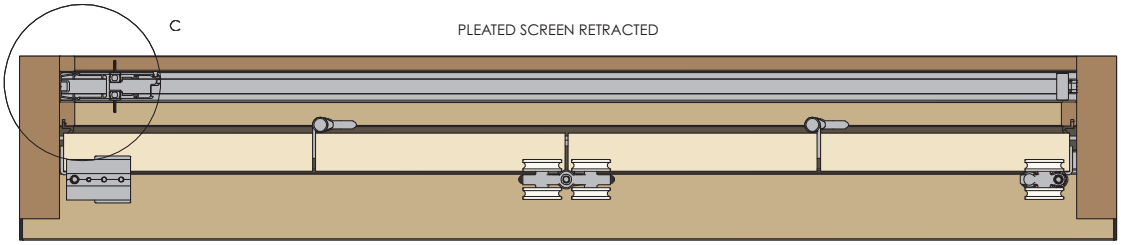

612 Integrated Retractable Pleated Insect Screen

Top View – Brio Weatherfold 4s 50 &100

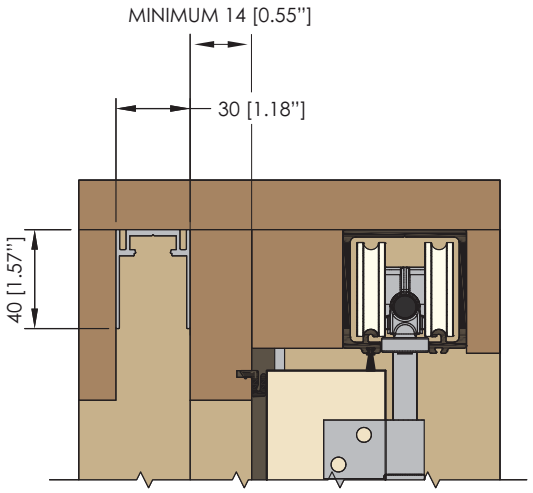

TOP TRACK HEAD DETAIL
FOR ALL SCREENS UP TO 2.8m [8'6"] HIGH

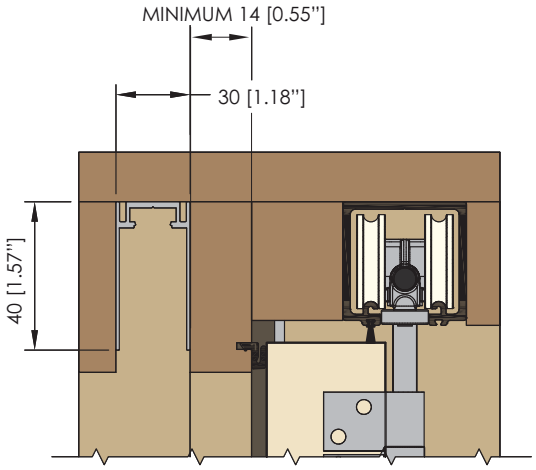

TOP TRACK HEAD DETAIL
FOR SCREENS 2.8m [9'2"], 3m [9'10"]
AND 3.2m [10'6"] HIGH

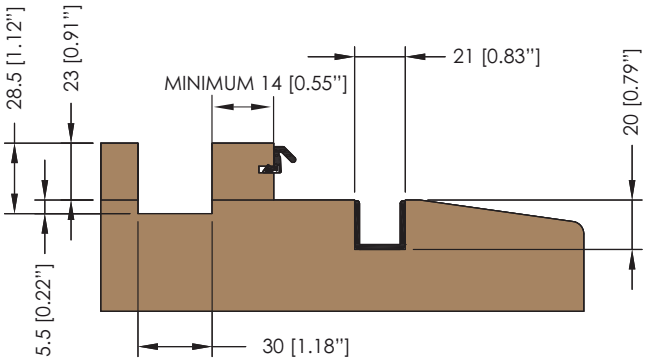

BOTTOM CHANNEL SILL DETAIL

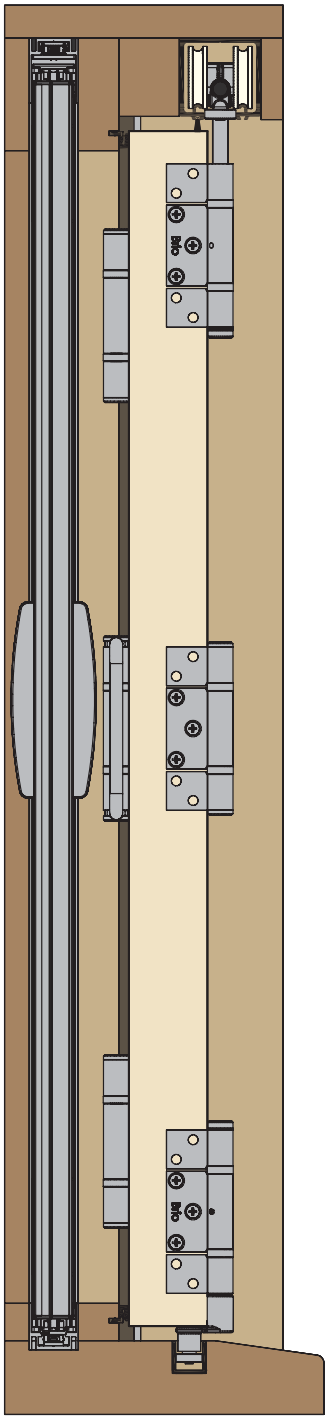

Panel Configuration and Hardware Location

Outward opening panels

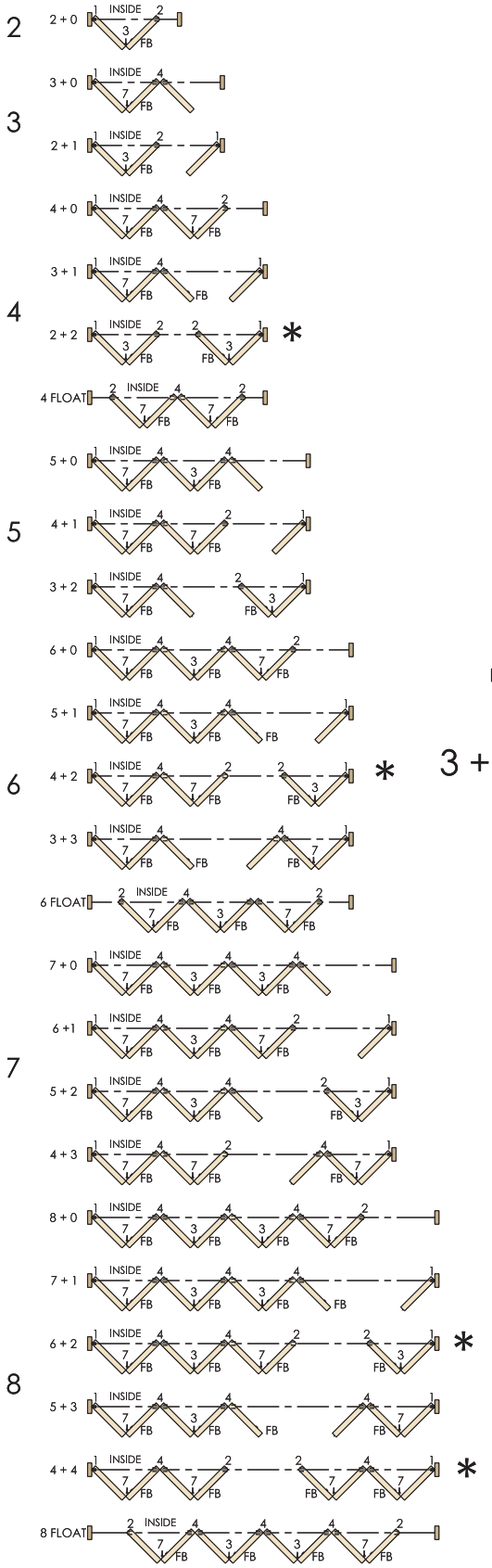

HARDWARE LEGEND		
SYMBOL	REF.	DESCRIPTION
	1	Adjustable pivot set
	2	End hanger set with guide
	3	Hinge set with hinge handle
	4	Intermediate hanger set with guide
	5	Hinge set
	6	Offset hinge set
	7	Offset hinge set with hinge handle
	8	Meeting door set
	FB	Flush bolt No. 456
	FP	Flush pull No. 401
	FB&FP	Flush bolt & flush pull

The reference number is an abbreviation of the full set number.

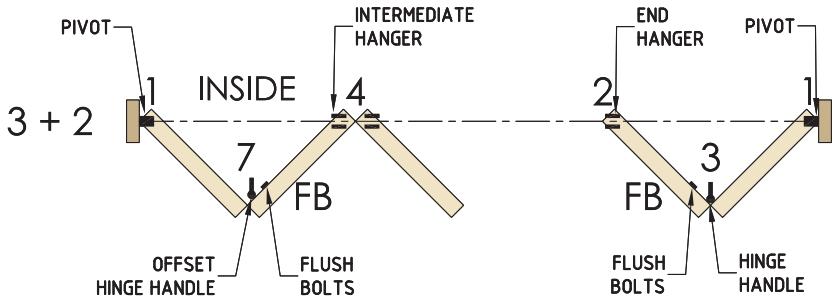

* Two Set 2 s mounted left and right are replaced with a single Set 8 if panels are rebated.

Panel Configuration and Hardware Location

Inward opening panels

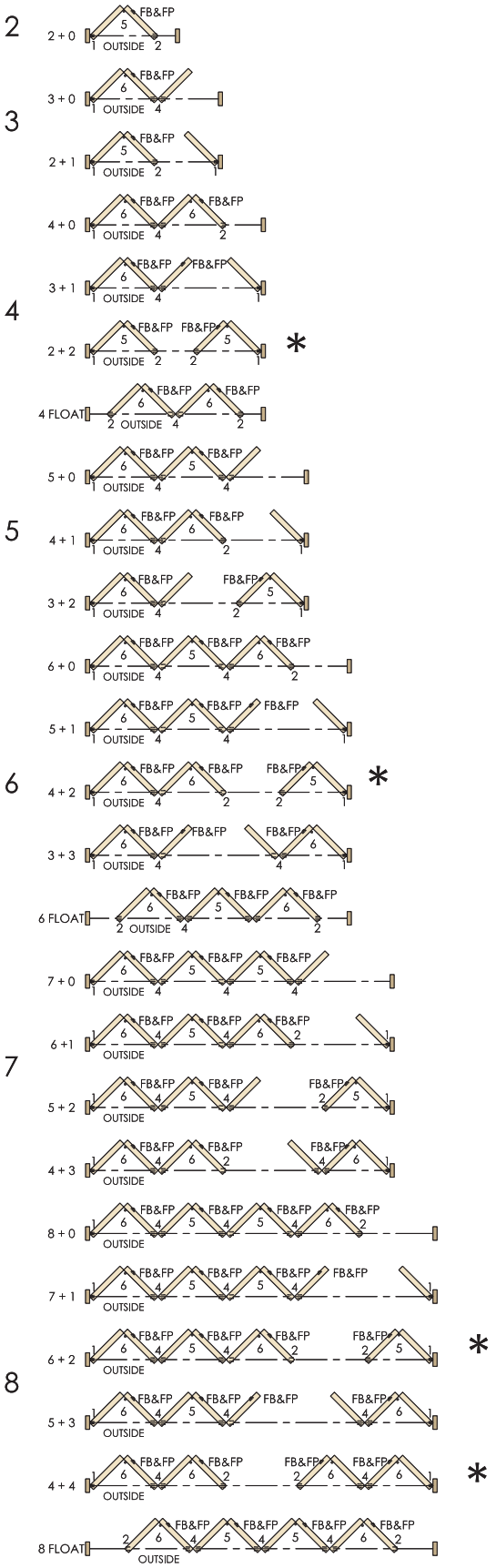

Flush Bolts
These are an aid in obtaining an even perimeter seal pressure as well as extra security for the panel. Available with square or round end in the same finishes as hinges.

Upper Flush Bolts
Fitted to each pair of panels. The special 'N' type (Cranked) flush bolts for inward opening panels are also available in longer lengths for tall panels.

Panel Height	Upper Flush Bolt Length
Panels up to 2100	190
2100 to 2400	450
2400 to 2600	600
Above 2600	1000

* Two Set 2 s mounted left and right are replaced with a single Set 8 if panels are rebated.

Meeting Panel Configurations

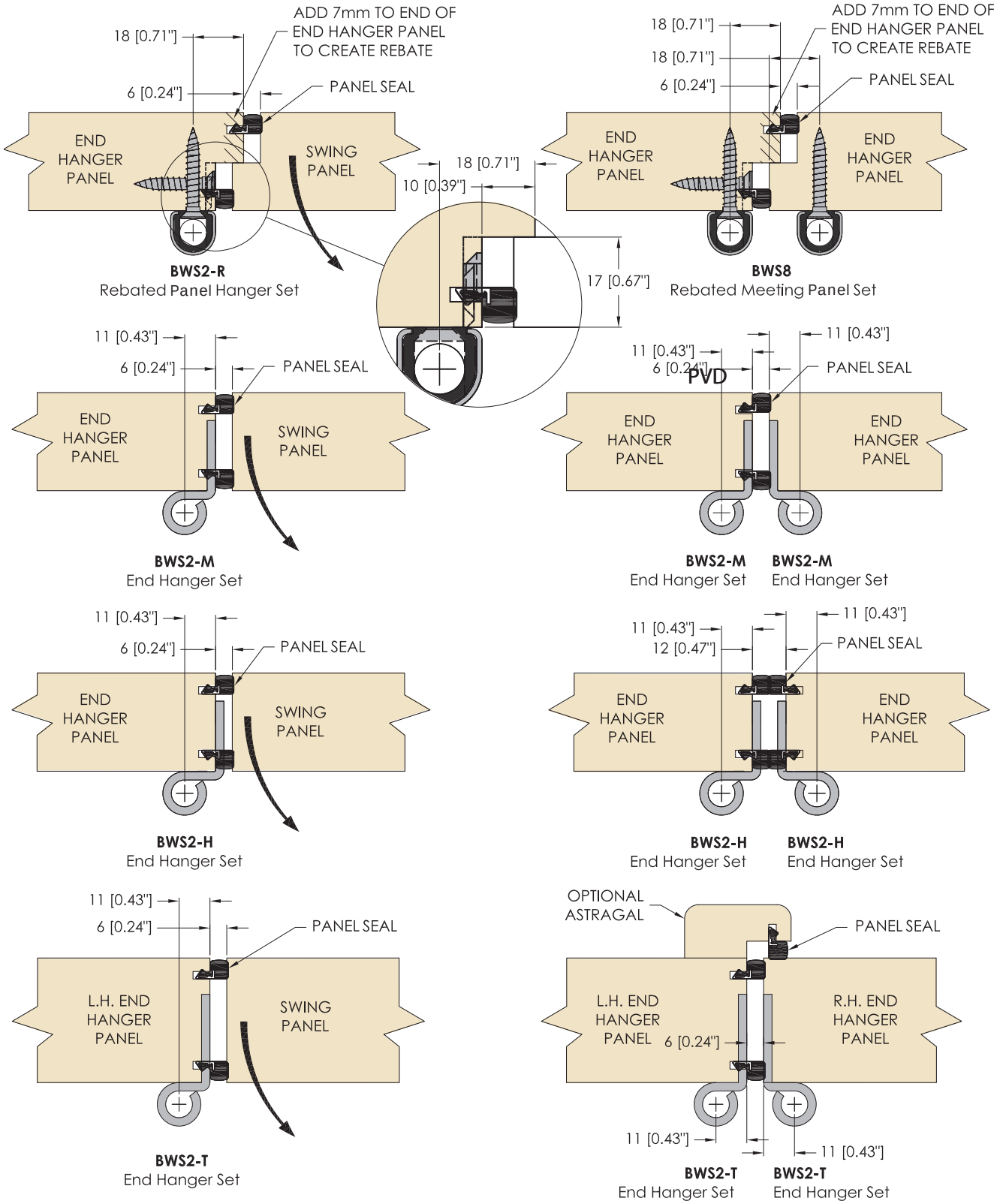

Flush Bolts

Timber Panels

OUTWARD OPENING

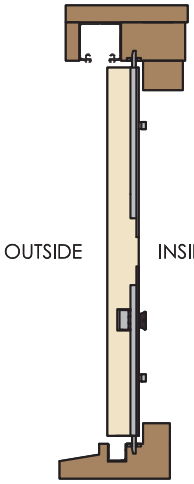

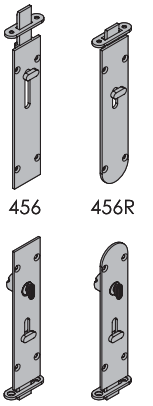

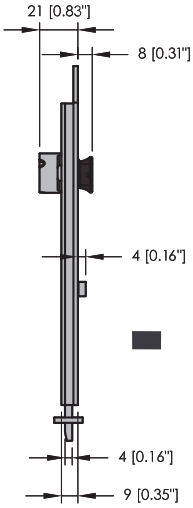

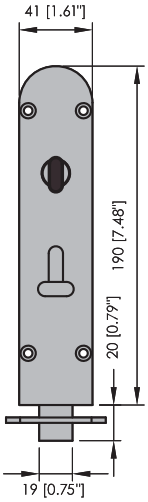

INWARD OPENING

456N Flush Bolts for timber panels closing against a rebate.

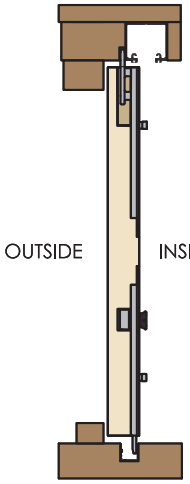

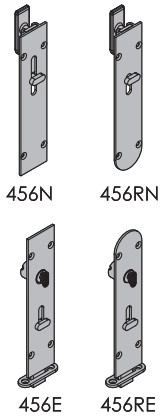

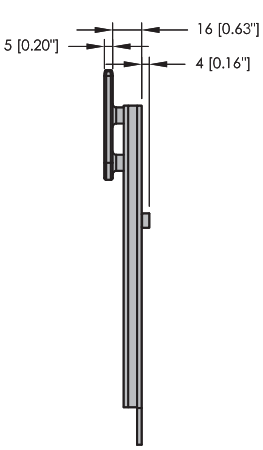

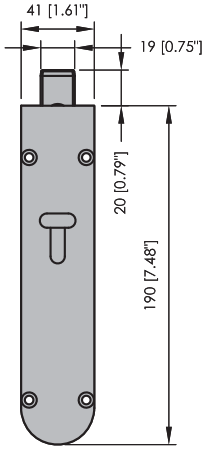

456REI Flush Bolts for flush floor timber panels.

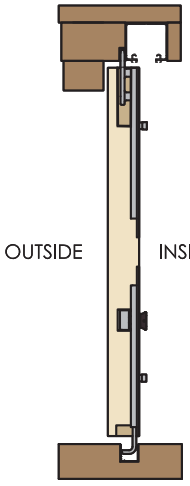

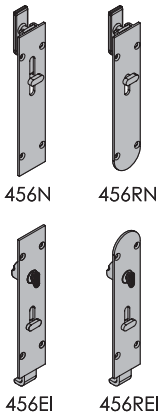

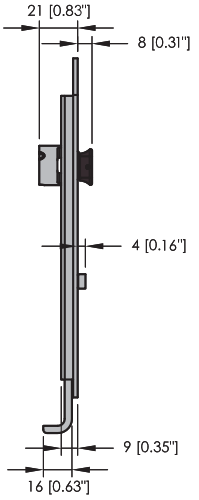

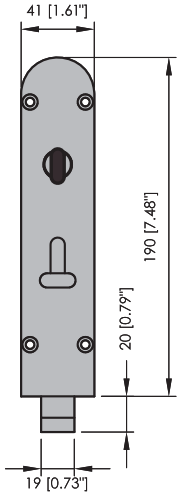

Aluminum Panels

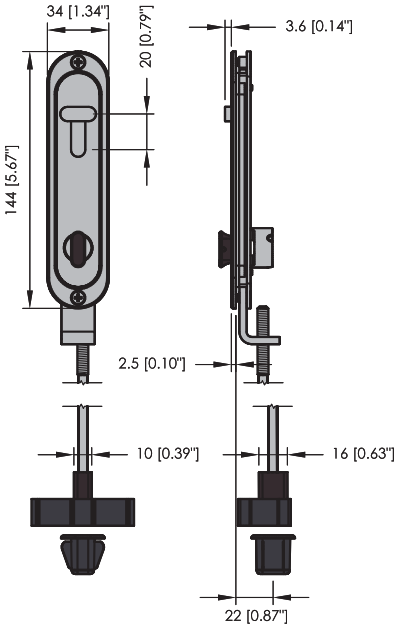

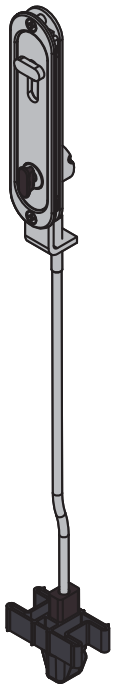

Specifications

	Weatherfold 4s 50	Weatherfold 4s 100	Weatherfold 4s 150
Maximum panel weight	50kg (110lbs)	100kg (220lbs)	150kg (330lbs)
Maximum panel height	3m (9'10")	3.3m (10'9")	4m (13'1")
Maximum panel width	1m (3'3")	1m (3'3")	1.2m (3'11")
Maximum number of panels	16 (8 left and 8 right)	16 (8 left and 8 right)	16 (8 left and 8 right)
Maximum opening width	16.07m (52'8")	16.07m (52'8")	19.59m (64'3")
Panel thickness **Non mortice** **Mortice (square corner)** **Mortice (radius corner)**	 35 to 68mm (1 3/8" to 2¾") 35 to 68mm (1 3/8" to 2¾") 44 to 68mm (1¾" to 2¾")	 35 to 68mm (1 3/8" to 2¾") 35 to 68mm (1 3/8" to 2¾") 44 to 68mm (1¾" to 2¾")	44 to 68mm (1¾" to 2¾")
Hardware finishes	SS – Satin Stainless, PB – PVD Brass, PS – Polished Stainless, PR – PVD Black	SS – Satin Stainless, PB – PVD Brass, PS – Polished Stainless, PR – PVD Black	SS – Satin Stainless, PR – PVD Black
Hanger bearing options	Stainless Steel or Chrome precision bearings	Stainless Steel or Chrome precision bearings	Stainless Steel precision bearings
Track profile	180 Series	250 Series	700 Series

Brio®

Brio – Australia
PO Box 604, Chester Hill, 2162
C5 - C7, Regents Park Estate, 391 Park Road,
Regents Park, NSW 2143, Australia
Phone +61 2 8718 6718 Fax +61 2 8718 6719
www.brio.com.au
email: brio.sales@allegion.com

Brio – UK
Unit 30 Gateway West, Kingfisher Boulevard, Newburn Riverside,
Newcastle Upon Tyne, NE15 8NZ, United Kingdom
Phone +44 (0) 191 2291224 Fax +44 (0) 191 2677891
www.briouk.com
email: brio.sales.uk@allegion.com

Brio – USA
85 Mushroom Blvd
Rochester, NY 14623-3201
Toll Free +1 855 586 6251 Phone +1 585 319 5599 Fax +1 585 319 5741
www.briousa.com
email: brio.sales.usa@allegion.com

About Allegion

Allegion (NYSE: ALLE) is a global pioneer in the field of safety and security. We keep people and their property safe, wherever they are, bringing together simple solutions and advanced technology. Allegion is a $2 billion company, with products sold in almost 130 countries. For more, visit www.brio.com.au

ALLEGION™

Brio ■ FSH ■ LCN ■ LEGGE ■ SCHLAGE

© 2013 Allegion
allegion.com