S3050 Pocket Sliding Doors

Installation Instructions

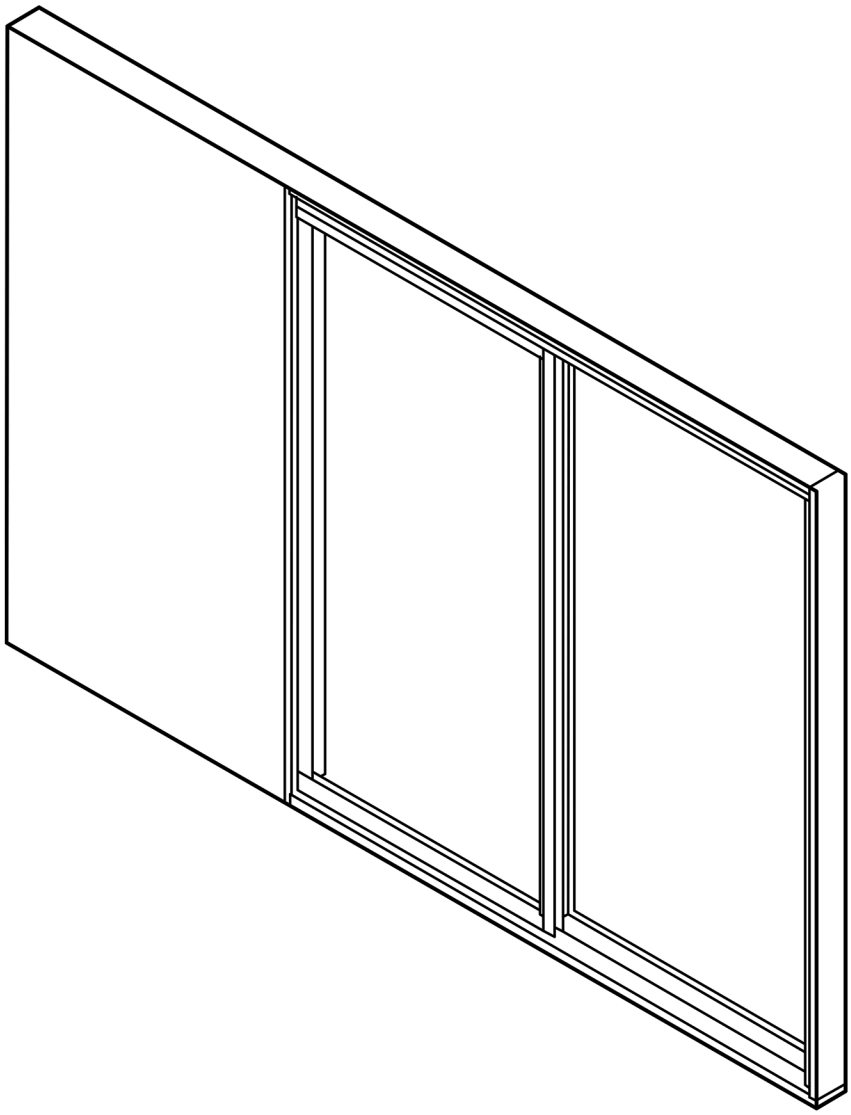

RAM
WINDOWS & DOORS

IMPORTANT NOTICE

Read these instructions thoroughly before beginning to install your RAM window or door product. Follow all guidelines regarding material use, preparation, personal safety and disposal. Failure to follow RAM's installation instructions and any other specific warnings, procedures for use, safety recommendations and standard construction practices can result in personal injury, poor product performance, and premature failure. Contact your RAM supplier if you have any questions regarding product and materials used in manufacturing. It is the responsibility of the builder, installer and subcontractors to protect the interior and exterior of RAM windows and doors from excessive contact with harsh chemical washes, construction material contamination and moisture.

Care and Maintenance

Every RAM window and door product has been designed and tested to meet or exceed industry performance and engineering standards. The key to preserving this performance is the proper installation, care, and maintenance of these products. Failure to perform regular maintenance will cause degradation of your window or door product and will void the manufacturer's warranty. Detailed care and maintenance instructions can be found on our website at **ramwindows.com**.

Cleaning Instructions

In addition to proper care and maintenance, all RAM window and door products should be cleaned using approved chemicals and solvents that prevent product degradation. A more detailed listing of cleaning methods and warnings can be found on our website at **ramwindows.com**. General cleaning instructions are as follows:

FRAMES: As with any building product, aluminum requires reasonable care during the installation process as well as periodic cleaning and maintenance after installation. Although both painted and anodized aluminum has excellent corrosion resistance properties, its natural beauty can be marred by harsh chemicals, abrasive materials or neglect. Such conditions usually affect only the surface appearance and do not reduce the service life of the product, however, the marks resulting from such mistreatment may be permanent.

During and immediately after installation:

• Protect all surfaces. It is especially important to not allow stucco or other concrete materials to set on the anodized or painted finish. These building materials are caustic and will permanently damage the finish.
• Clean metal surfaces with mild soapy water, using a sponge or soft cloth.
• Rinse thoroughly by lightly spraying with clean water and repeat as needed.
• Wipe dry with a soft cloth.
• Make sure all weep holes, drain holes and tracks are unclogged.

GLASS: To preserve the visual and energy performance of your window or door, the glass units require reasonable care and attention. The glass surface, especially tempered glass, can be easily scratched or permanently damaged by improper cleaning. **NOTE**: Please reference Cardinal Glass Industries for proper handling of glass. More information can be found at **cardinalcorp.com**.

During and immediately after installation:

• Protect all surfaces. It is especially important to not allow stucco or other concrete materials to set on the glass surface. These building materials are caustic and will permanently damage the glass surface.
• Clean glass surfaces with mild soapy water, using a sponge or soft cloth.
• Rinse thoroughly by lightly spraying with clean water and repeat as needed.
• Wipe dry with a soft cloth.
• Make sure all weep holes, drain holes and tracks are unclogged.
• HELPFUL TIP: WINDOW AND DOOR STICKERS CAN BE MORE EASILY REMOVED IF SOAKED BY WATER FOR FIVE MINUTES PRIOR ATTEMPTED REMOVAL.

COMPONENTS: The internal and external components of your product are essential to the proper function and overall performance of your window or door. While these components have been designed for rugged durability, they still require regular inspection and maintenance to ensure proper operation.

During and immediately after installation:

• Vacuum out and clean any dirt or debris from the sill, roller assembly and track areas.
• Lubricate the hardware components, roller assembly and track with a wet silicone spray using a straw applicator.
• Inspect the weather-stripping to make sure it is clean and not torn or brittle.
• Inspect the window or door locks to make sure they function properly. Contact the manufacturer to adjust the locks if needed.

SUPPLIES REQUIRED:

- Anchors (included)
- Moisture Resistant Shims (wedge or horsehoe shims, unless specified by building codes. Long enough to reach full framed depth.)
- Closed Cell Foam Backer Rod
- Window & Door Butyl Flashing Tape
- Installation Sealant
- Sill Pan (recommended, but not required unless specified by code)

TOOLS REQUIRED:

- Laser Level
- Tape Measure
- Drill
- 1/8" drill bit - 6" long
- Square
- Plumb Bob
- Utility Knife
- Impact Driver
- #3 Phillips Head Screwdriver
- Flat Head Screwdriver

Other construction materials may be required. Read the instructions and inspect the wall conditions before you begin.

Store doors in upright position, out of direct sunlight.

TWO OR MORE PEOPLE WILL BE REQUIRED FOR THE DOOR INSTALLATION.

1 PREPARE FOR INSTALLATION

A. **Remove plastic wrap and cardboard packaging from the door.**
B. **Inspect the product for any damage** such as cracks, dents or scratches. DO NOT install damaged doors.
C. **Remove dirt and debris** from all surfaces.
D. **Read the entire installation instructions before proceeding.**

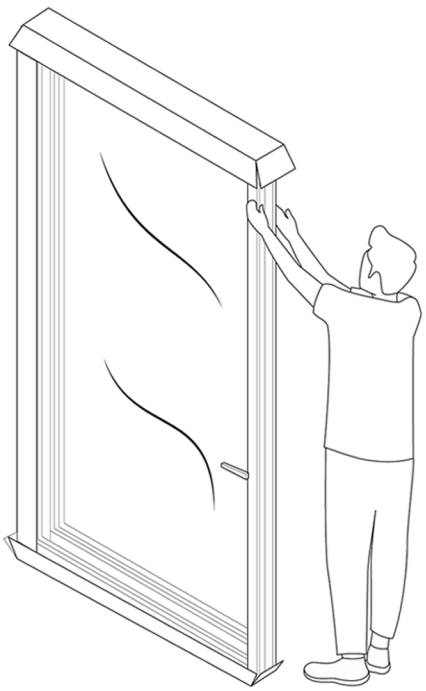

2 PREPARE THE ROUGH OPENING

A. **Plumb, square, and level the rough opening.** The opening should not be more than ¼" out of square, level, and plumb.

B. **Seal the rough opening with butyl flashing tape** in accordance with local building codes.
Note: If sill pan is required by code, install the sill pan onto the door at this step.

2A

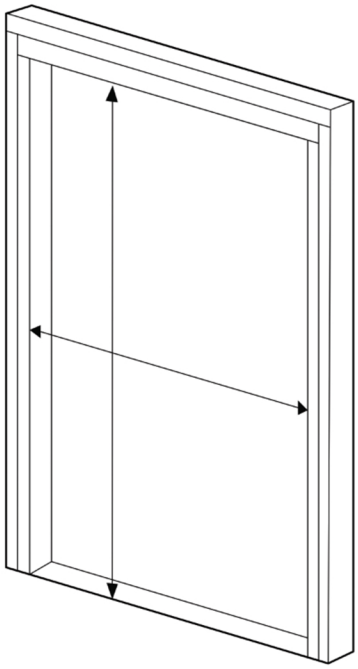

2B

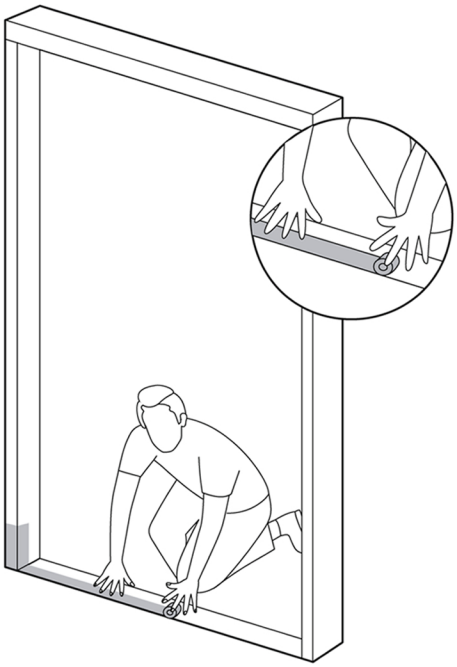

3 FRAME INSTALL

Note: One wall (interior recommended) needs to be left out until frame install is complete.

A. **Ensure the floor is flat and level,** and does not vary more than .0625” (1/16”) per foot or a total of .25” (1/4”) over the entire width of the opening.
Note: Repairs must be made if the floor does not meet specifications.

B. **Install end plates on head and sill**. Apply a liberal amount of sealant to ensure a seal between end plate and head and sill.
Note: End plates only go on the locking jam side.

C. **With weep holes facing the exterior, position the threshold assembly on the floor** in the approximate location and ensure alignment on the interior and exterior of the structure.

3A

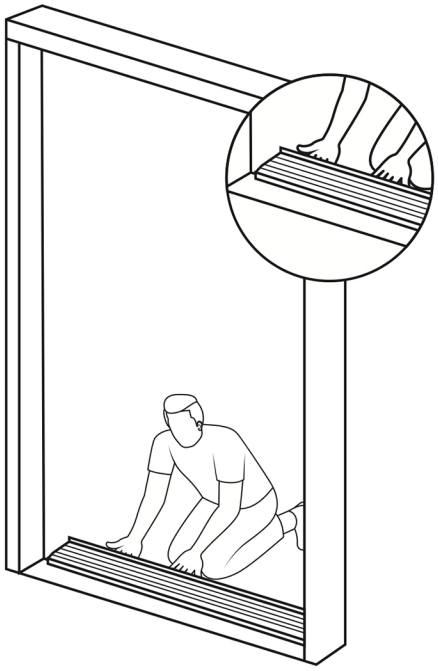

3B

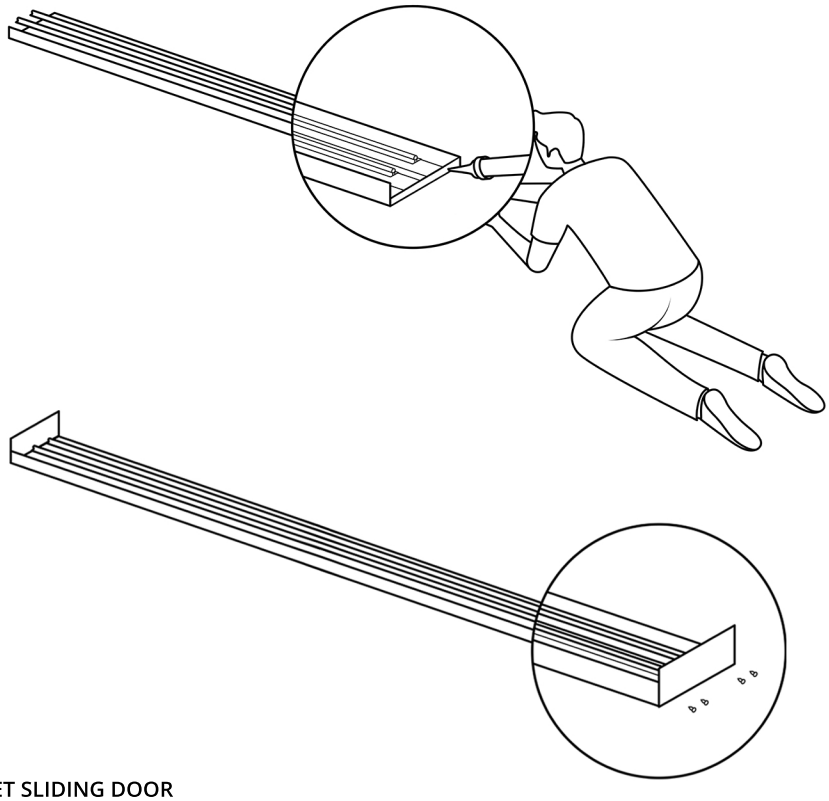

3 FRAME INSTALL CONTINUED

D. **Inspect the mating surface of the sill and floor** and mark any gaps that are present. Any voids or bumps will need to be filled/shimmed or smoothed before installation. Sill must be fully supported.

E. **Ensure the head can be installed directly above sill** on both ends. Mark the sill around the entire perimeter to guide final installation. If being installed on to a concrete condition, mark holes on the sill to later be prepped #10 or similar concrete anchors (not supplied).

F. **Apply a liberal amount of approved sealant** around the weeping slots as to not block water from evacuating the system. Add an additional generous bead in a straight line across the entire length of the sill behind the weeps, and straight lines along the length in between each weep.

3D

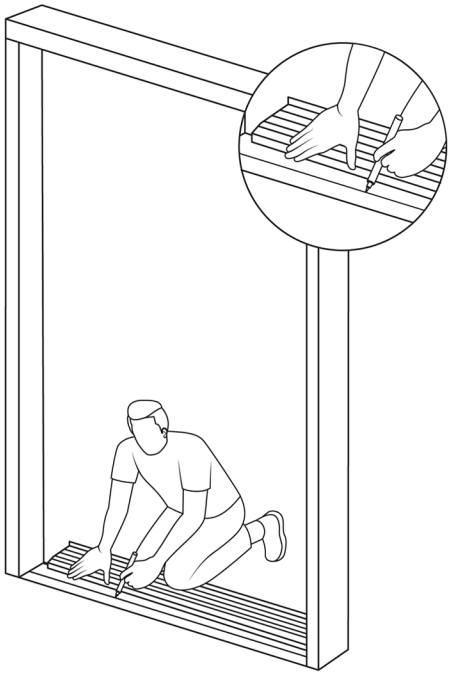

3F

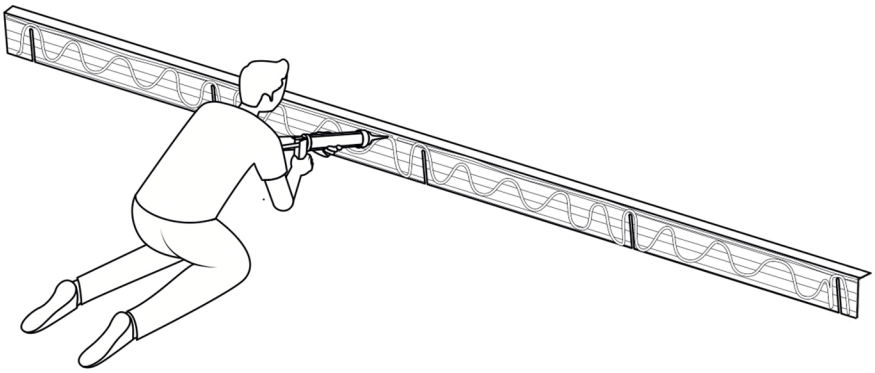

3 FRAME INSTALL CONTINUED

G. **Apply a 1/2" wide by 1/2" high bed of sealant** on the floor along the exterior side of your mark along entire length of opening, applying 6" up the jamb and from the inside corners across the end to the outside edge of where the Threshold Track assembly will be.
Note: Ensure water barrier has no voids across the full width of the opening.

H. **Using marks from Step 3E, set sill in place** and level as required. Once in place, walk across the entire sill to help sealant settle.

I. **Inspect header to ensure sufficient backing** for anchors.

3G

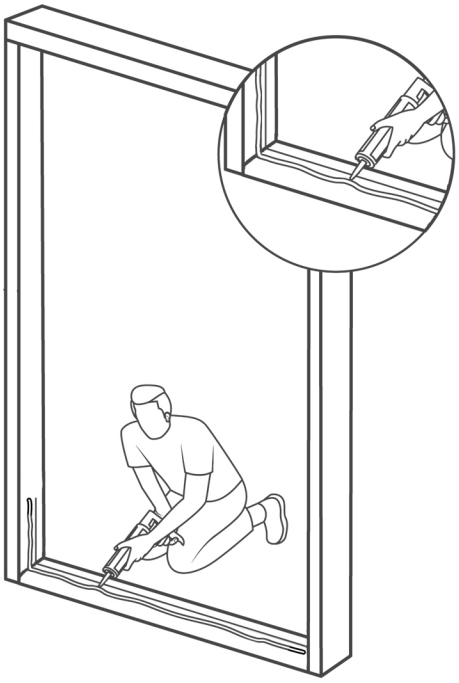

3J

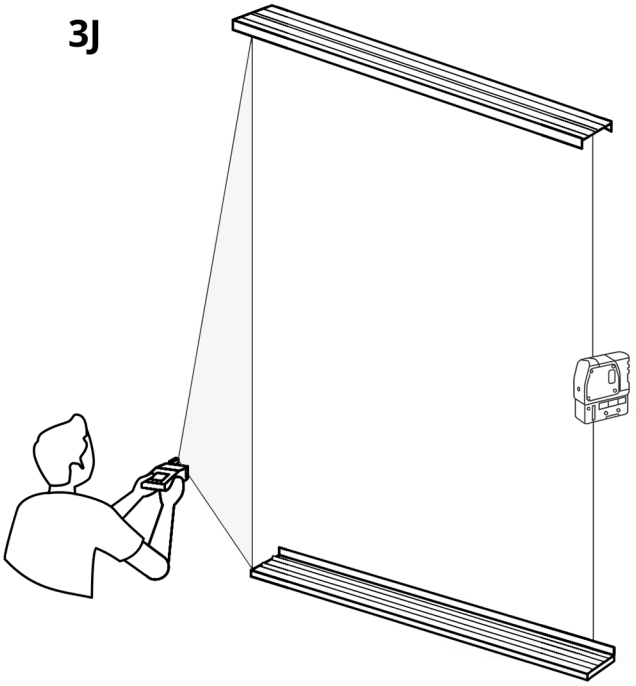

J. **Using a laser level, mark the position for the head track** directly above the sill, and ensure square and plumb with a plumb bob, laser or similar tool. Loosely fasten head into place through predrilled holes using supplied #10 fasteners, drill pilot holes into wood as necessary.

K. **Properly seal the holes and endplate** on head and threshold and place jamb into position. Adjust head height to properly align with the endplate holes.

3 FRAME INSTALL CONTINUED

L. **Anchor head through predrilled holes** using supplied #10 fasteners, being sure to apply sealant between fasteners and anchoring holes. Ensure that the head is plumb, level, square and parallel with the sill.

M. **Anchor the jamb, being sure to apply sealant between fasteners and anchoring locations.** Start by loosely installing end plate fasteners (circles). Then anchor the middle fasteners (squares) to ensure plumb, level, square. Then anchor the outer fasteners (triangles) while using a straight edge to ensure flatness. Finally, finish installing end plate fasteners.

N. **Install rubber bumper stops** into each head cavity on the pocket side of the frame. Once inserted, slide the bumper so that the face is contacting the end plate.

3L

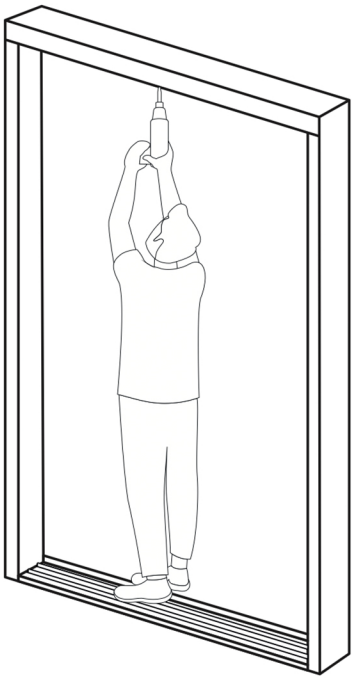

3M

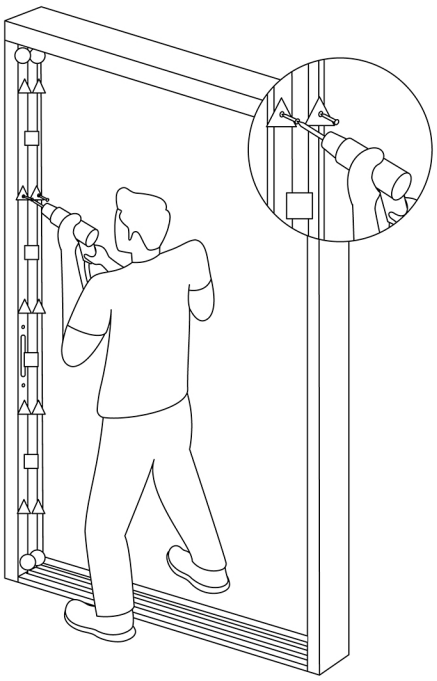

3N

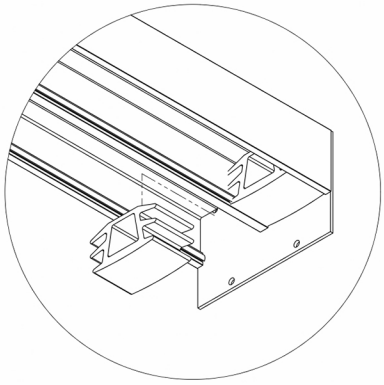

4 PANEL INSTALL

NOTE: INSTALL ADHESIVE BACKED DUST PLUG FROM STEP 5.5 ON PAGE 12 (FOAM INSTALLATION). THE REST OF THE FOAM MUST BE INSTALLED AFTER PANELS ARE INSTALLED.

A. **Identify Lead Panel** - This panel will have a handle and a lock mechanism. Position the panel so the glazing stops are facing exterior. If biparting, there will be two lead panels. From the exterior of the building, with glazing stops facing outwards, lean and insert into the interior most head track, lifting while pivoting the door to the interior most threshold track. Adjust rollers to lift panel off threshold while maintaining contact with weather seals. Roll panel towards locking jamb and make final adjustments so the gap between the jamb and lock stile is consistent from head to threshold.

4A

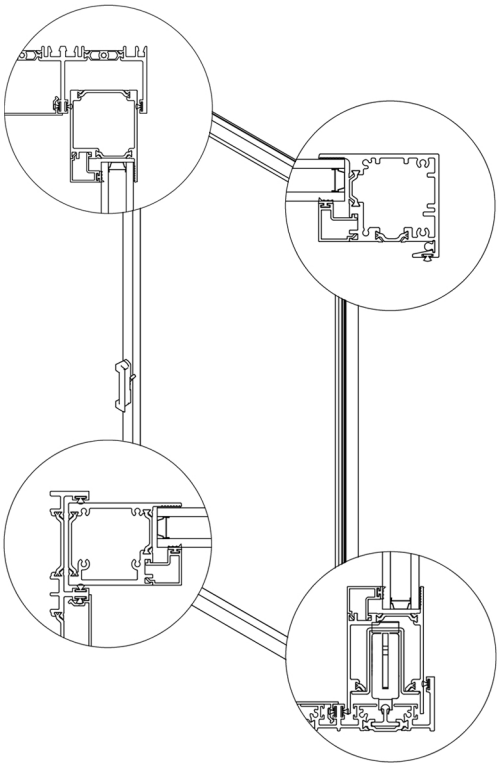

4B

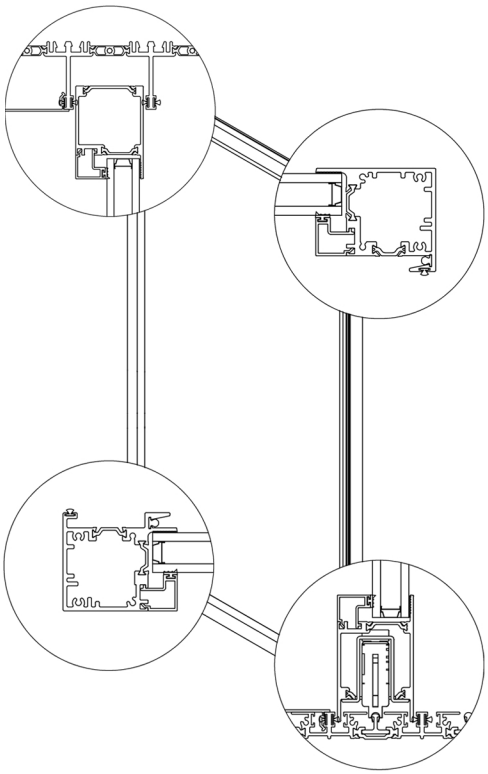

B. **Identify Intermediate Panel (skip if 2 panel door)** - This panel will have two interlock stiles. Position the panel so the glazing stops facing the exterior. With half the panel overlapping the lead panel, insert the panel into the next track, lifting while pivoting the door to the next threshold track. Adjust rollers to match sightlines and with previous panel. Repeat for each intermediate panel.

4 PANEL INSTALL CONTINUED

STOP: DO NOT ANCHOR FIXED PANEL WITHOUT COMPLETING THE FOLLOWING STEPS.

C. **Identify Pocket Panel** - This panel will have one interlocking stile and one smooth stile without handle and locking hardware. Position previous panel so the fixed panel can be installed while overlapping 50% of the previous panel. Position with glazing stops facing exterior, lean and insert into the exterior most head track, lifting while pivoting the door to the exterior most threshold track. While lifting the panel, slide provided plastic spacer bar underneath panel. Use water approved shims to match sightlines to previous panel.

D. **Make any necessary adjustments to rollers and shims** to ensure the best possible alignment.

E . **Close door and lock lead panel**. If adjustments are necessary, complete now. Vertical adjustments are done by loosening strike mounting screws and sliding entire strike assembly up or down. There are also two spring loaded screws to adjust strike horizontally towards the lead panel. This should be utilized to remove or provide any necessary slack for effortless locking. Ensure proper locking is achieved before moving to the next step.

F. **With lead panel fully closed AND locked**, gently close and engage the remainder of the panels until pocket panel is fully engaged with previous panel. Install the post interlock. IF NECESSARY, slide panels out of the way to and lower/raise head to ensure proper fitment. Once proper head and sill engagement are met, slide the post interlock until it makes secure contact with pocket panel interlock. Install through pre-drilled hole at the sill, being sure to drill a proper pilot hole (#26 or .147 drill). Ensure plumb, level and square before installing screw in the head. The pocket panel can now be slid out of the pocket by lifting the panel up and pushing the lower half away from the post interlock and sliding towards lock jamb. Post interlock can now be fastened to wall, ensuring it is shimmed plumb, level and square. Using a square, align interior side post interlock to the exterior one that was just installed. Using the same technique, install post interlock to frame. Check one more time that the head is properly shimmed and is plumb, level and square, moving panels as necessary to access install holes. Interior wall may be installed now and post interlock can be properly secured to it in the same fashion as exterior side.

4C

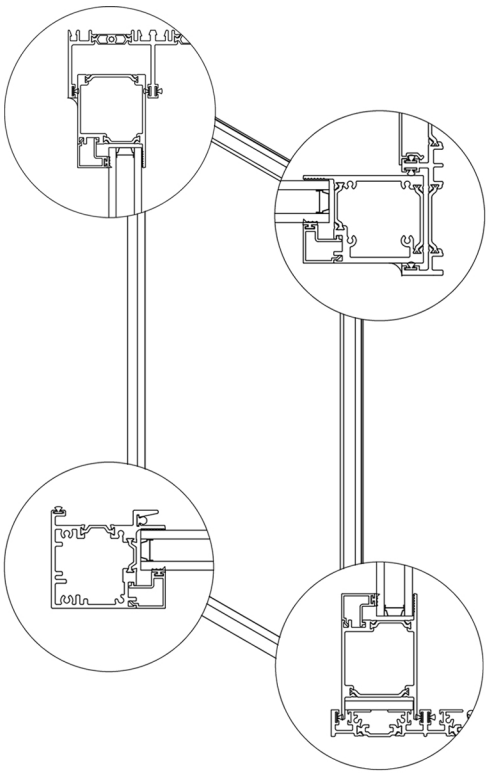

4 PANEL INSTALL CONTINUED

G. **Install pocket enclosure using self-tapping fasteners** to the back of the pocket panel. Align enclosure to exterior edge of stile, being sure not to extend past the stile on the exterior side as this may cause interference with interior pocket wall.

H. **Seal between post interlock and frame** at the head and sill on both sides. Ensure that there is a proper water barrier at vertical and horizontal mating surfaces.

I. **Reinstall pocket panel into the pocket by** lifting panel and pushing the lower half towards the interior of home until interlock on stile clears the post interlock. Be sure to unlock the door and move panels towards pocket to provide relief for this step. Ensure rolling performance meets expectations and adjust rollers and post interlock shims as necessary. Double check that door operates and locks as expected. Make any necessary adjustments.

J. **Install the remainder of the head, sill and jamb covers**. Use a clean rubber mallet or plastic/wood block, free of burs to prevent damaging during installation.

K. **Seal sill from jamb to jamb** on interior side only. Seal the jambs and head on the exterior only.

STOP: BE SURE TO NOT SEAL EXTERIOR SIDE OF SILL SO DOOR IS FREE TO WEEP PROPERLY.

5 FOAM INSTALLATION

1. **Head Track - Adhesive Backed Closed Cell Foam & Dust Plug**
   Install foam into the frame head track above interlock stiles. Determine install location after panels have been placed into the frame. Dust plug fins shall be oriented perpendicular to the head track.
2. **Interlock Stile Head Notch - Adhesive Backed Closed Cell Foam**
   Install foam onto the interlock stile so that the gap between the head and interlock notch is filled. Foam should be installed once the panel has been set into the frame. The leading edge of the foam ramp shall be oriented towards the fixed panel jamb. If necessary, trim the width of the foam for proper fitment between the frame and interlock stile.
3. **Interlock Stile & Sill Gap - Adhesive Backed Closed Cell Foam**
   Install foam onto the interlock stile so that the gap between the interlock and sill is filled. If necessary, trim the width of the foam for proper fitment between the frame and interlock stile.

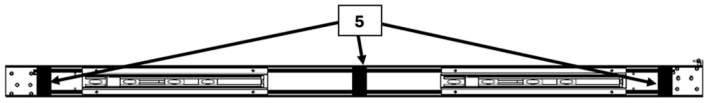

4. **Sill Track Rail Extension Cavity - Open Cell Foam**
   Install foam into the sill rail extension cavities. Determine install location with the door closed. Foam shall be placed under the rail extensions below the interlock.
5. **Operable Panel Bottom Rail - Adhesive Backed Dust Plug**
   Apply one dust plug between each roller carriage and stile. Dust plug fin shall be oriented perpendicular to bottom rail.
   Apply one dust plug at centerline of bottom rail. Dust plug fin shall be oriented perpendicular to bottom rail.
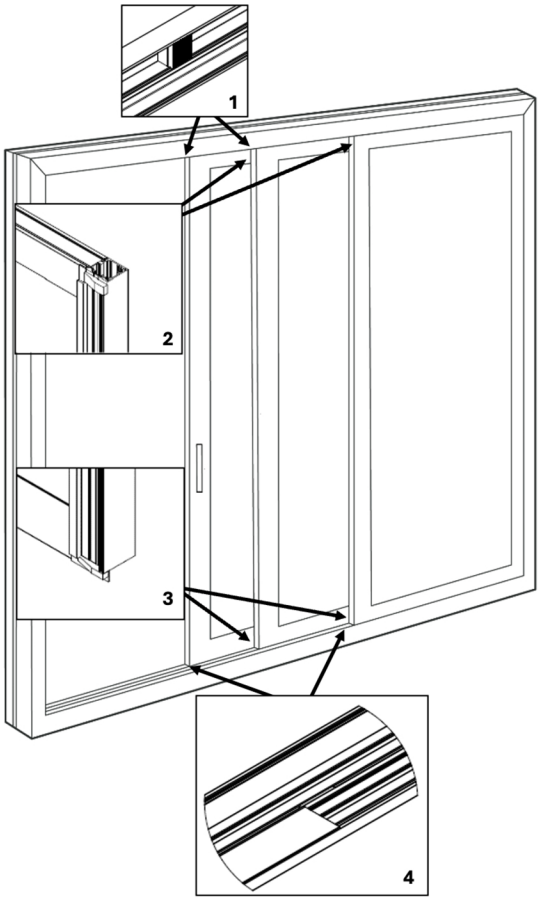
5